ALL SIZES IN MILLIMETRES

Homefires 800 Economaster Fireplace Bundle

Open freestanding fireplace with its flue pipes, collar and cowl

01 FRONT VIEW

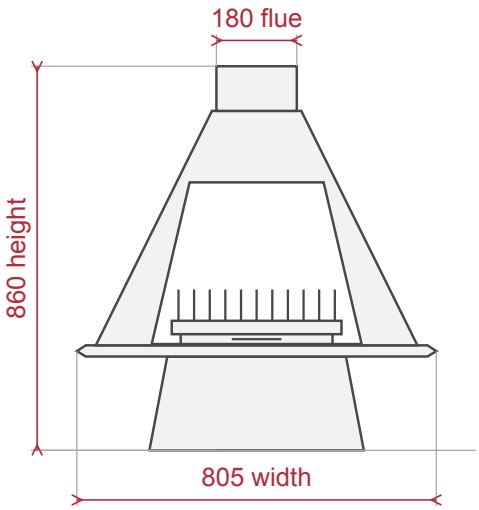

02 SIDE VIEW

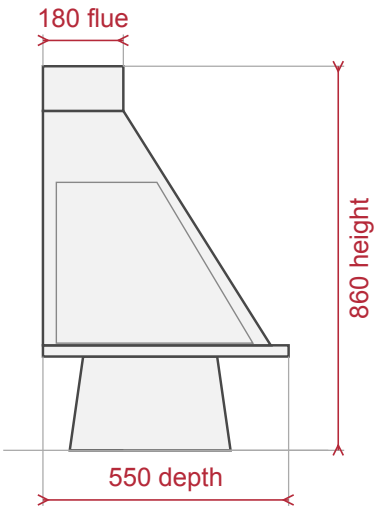

Front at the right.

03 TOP VIEW

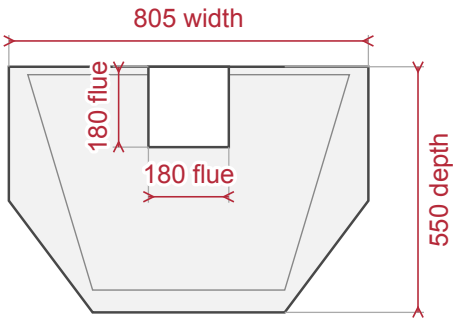

Back at the top. Front at the bottom.

04 FLUE PARTS (SMALLER SCALE)

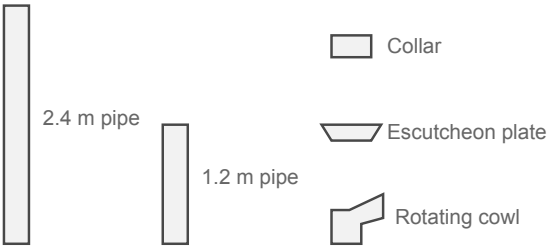

Pipes 180 × 180, in the bundle.

PLANNING NOTES

The 860 body height does not include the flue. The pipes and the cowl go above it.
The pipe lengths are not the final chimney height. Plan it for your building with an installer.
Plan the hearth, the support, the joints and the roof exit before you order.
The bundle: the fireplace, the two flue pipes, a collar, an escutcheon plate and a small rotating cowl.

BRAAI CULTURE