ALL SIZES IN MILLIMETRES

Chad-O-Chef 5 Burner Entertainer with Warmer Tray

Built-in box with a 5 burner Sizzler gas insert and a warmer tray, for natural or forced draught

01 NATURAL DRAUGHT, FRONT VIEW, DOORS OPEN

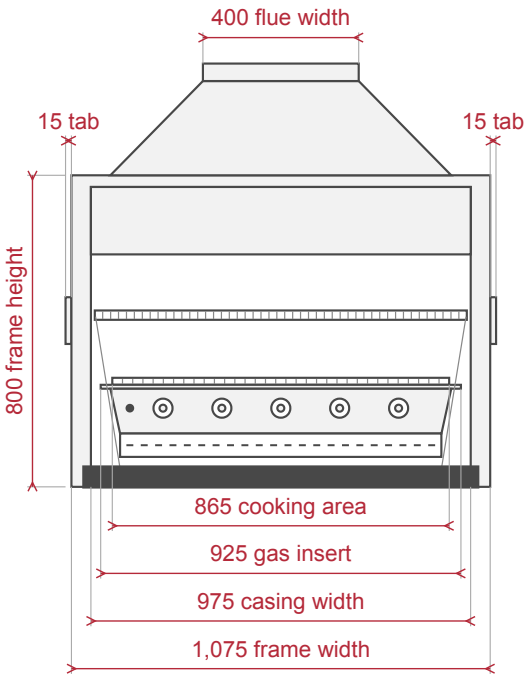

02 NATURAL DRAUGHT, SIDE VIEW

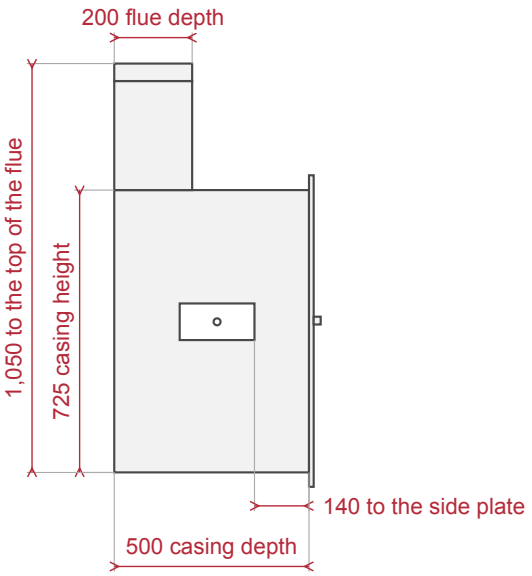

Front at the right.

03 FORCED DRAUGHT, FRONT VIEW, DOORS CLOSED

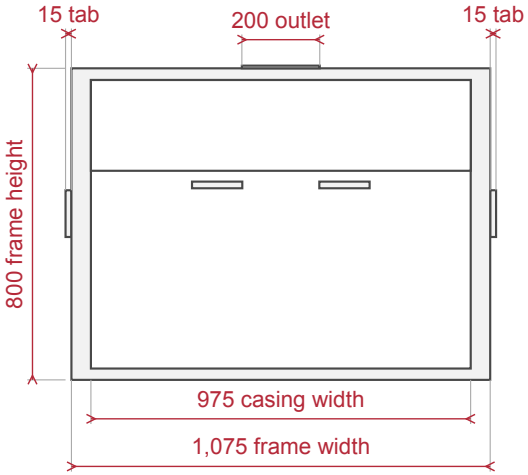

04 FORCED DRAUGHT, SIDE VIEW

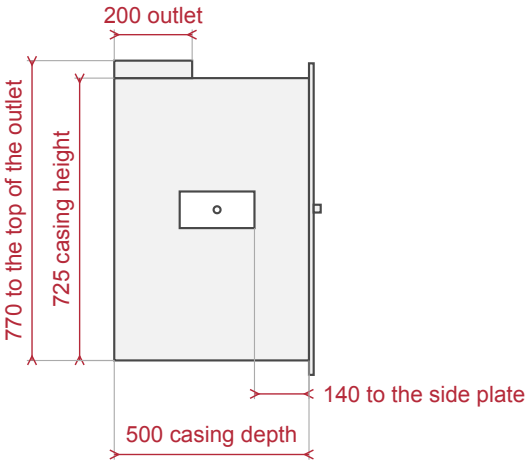

Front at the right.

05 GAS INSERT, TOP VIEW

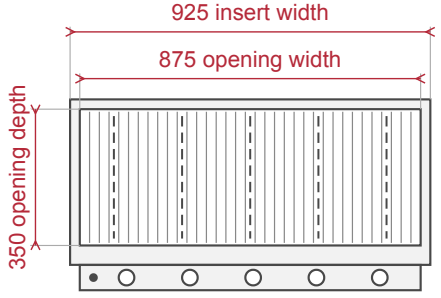

Front at the bottom. Dashed: the 5 burners.

06 GAS INSERT, SIDE VIEW

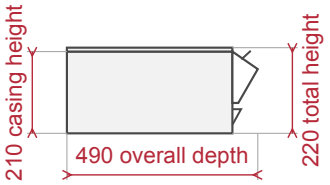

Front at the right.

BRAAI CULTURE

Chad-O-Chef 5 Burner Entertainer with Warmer Tray

07 COOKING AREA, TOP VIEW

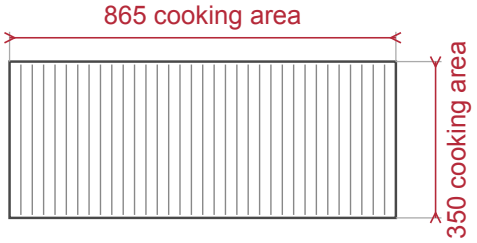

08 BUILT-IN EXAMPLE, SIDE VIEW (SMALLER SCALE)

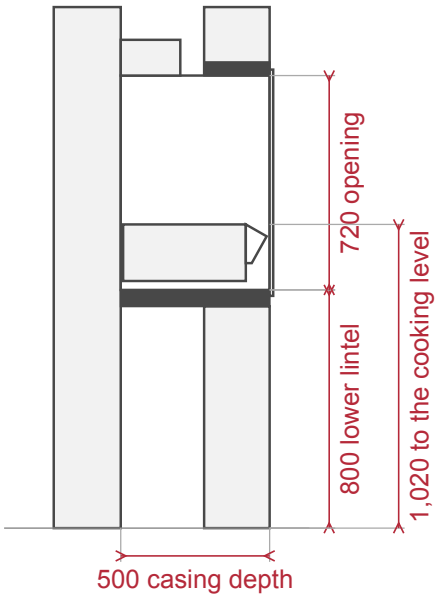

Front at the right.
This is one example of a layout, set in brickwork.
It is not a size for an existing opening.
Ask us for the opening size before you build.

PLANNING NOTES

These are product sizes, not a building-opening size. Ask us for the opening size before you build.
It must be built into brickwork on supporting lintels. It cannot be fitted into an existing opening.
Natural draught uses a chimney with no assisted extraction.
Forced draught needs extraction parts, sold separately.
For outdoor use or a patio with at least one open side. It is not for wood or charcoal fires.
For domestic use only. A registered gas installer must install it.
The Sizzler gas insert and the built-in box with a light fitting are included.
A warmer tray is included. A rotisserie is an optional upgrade.
A stainless steel drip tray and a dust cover are included.
The light needs an electrical connection. So do a rotisserie and an extractor, where they are fitted.
The doors must stay open while the braai is in use or hot.
The cooking grids are 6 mm stainless steel bar and are dishwasher safe.
Ask us for the size with the bottom door open before you plan the space.