Chad-O-Chef Stir Fry Pans

304-grade stainless-steel pans for Chad-O-Chef gas grills: small, medium and large

01 SMALL (SFP220), FROM ABOVE

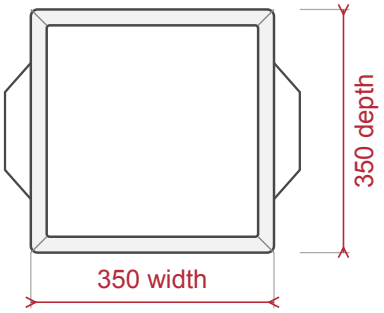

02 MEDIUM (SFP320), FROM ABOVE

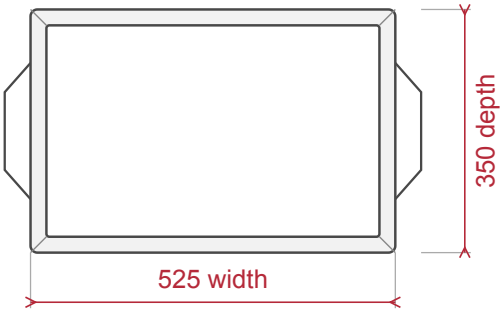

03 LARGE (SFP420), FROM ABOVE

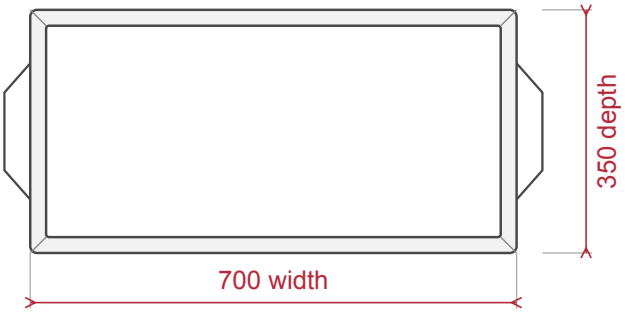

04 STEEL THICKNESS (LARGER SCALE)

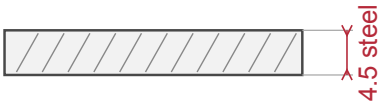

A cut through the pan.

PLANNING NOTES

These are nominal pan sizes, not the usable cooking area. Ask us for the full size with the handles.
The small pan fits Chad-O-Chef 3, 4, 5 and 6 burner gas grills.
The medium pan fits Chad-O-Chef 4, 5 and 6 burner gas grills.
The large pan fits Chad-O-Chef 5 and 6 burner gas grills.
Always use a pan at least one size smaller than your gas grill. Never cover the whole grilling area.
Use the pan level and secured, with the grill top grids in place. Each pan is sold separately.