ALL SIZES IN MILLIMETRES

Chad-O-Chef Wall Mounted Extractor Hood 1000

Stainless-steel hood for above a gas braai; top or rear duct exit, motor sold separately

01 TOP EXIT, FRONT VIEW

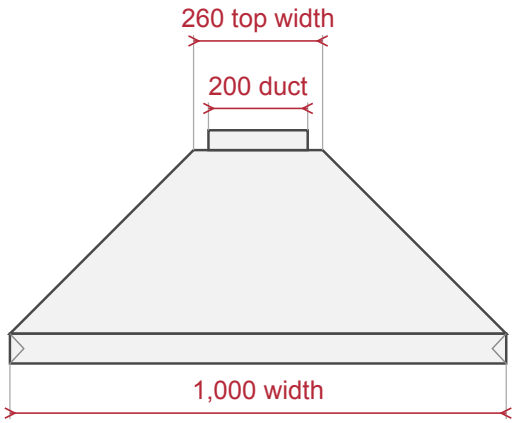

02 TOP EXIT, SIDE VIEW

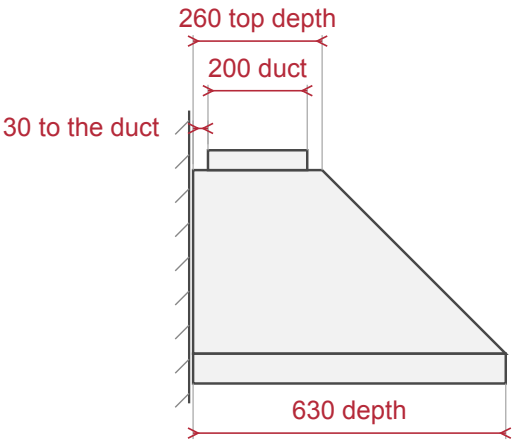

Wall at the left. Front at the right.

03 REAR EXIT, FRONT VIEW

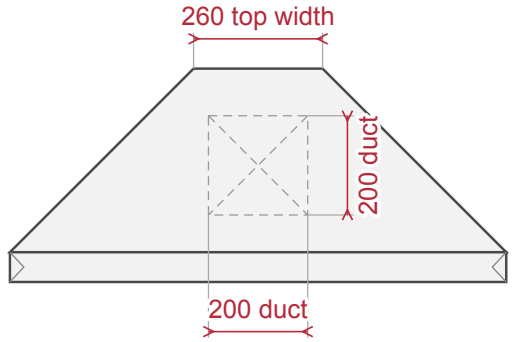

Dashed: the duct exit in the back of the hood.

04 REAR EXIT, SIDE VIEW

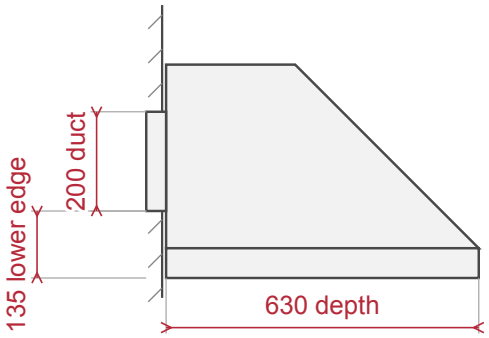

Wall at the left. The duct exit is at the back.

BRAAI CULTURE

Chad-O-Chef Wall Mounted Extractor Hood 1000

05 HEIGHT ABOVE THE GRILL (SMALLER SCALE)

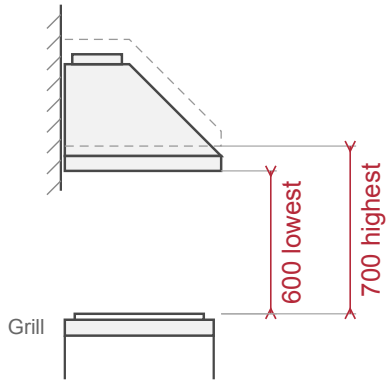

Solid: the hood at its lowest.
Dashed: the hood at its highest.
Both are measured from the grill.

PLANNING NOTES

A stainless-steel extractor hood for the smoke from Chad-O-Chef gas braais. It goes on the wall.
It comes with a grease filter, a drip tray and a light fitting.
Choose a top or a rear duct exit. The duct exit is 200 × 200.
The motor, the ducting, the mock flue, the damper and the weather dome are sold separately.
Mount the hood 600 to 700 above the grill.
A qualified electrician must install the extractor fan. Confirm the full system for your installation.