ALL SIZES IN MILLIMETRES

Weber Performer Deluxe 57 cm GBS

Charcoal kettle braai on a cart, with a side table and a CharBin

01 FRONT VIEW, LID CLOSED

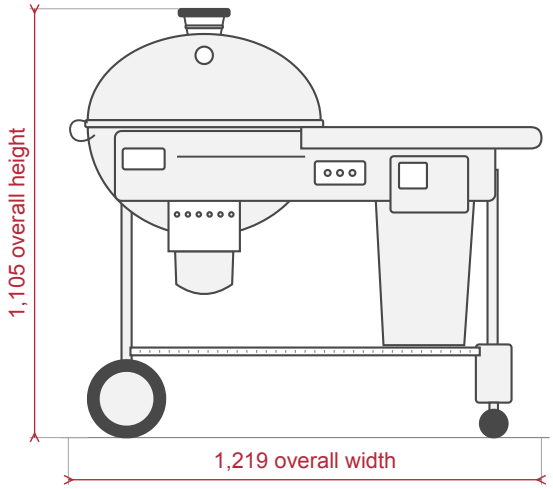

02 SIDE VIEW, LID CLOSED

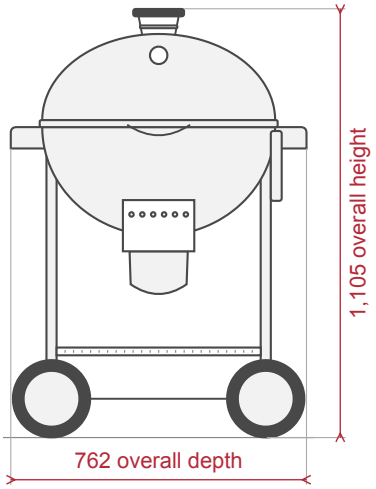

Seen from the wheel end. Front at the right.

03 TOP VIEW, LID CLOSED

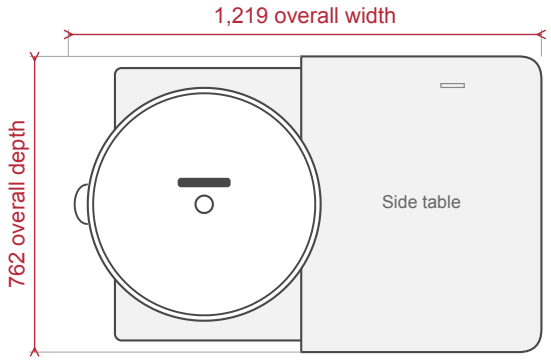

Front at the bottom.

04 COOKING GRATE

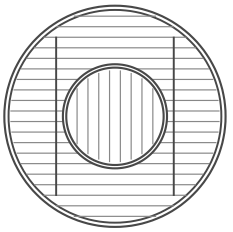

GBS stainless steel hinged cooking grate.

05 CLEARANCES, TOP VIEW (SMALLER SCALE)

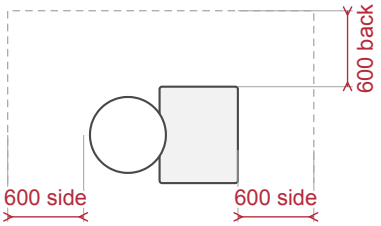

Keep anything that can burn at least 600 from the top, bottom, back and sides of the grill.
Front at the bottom of the plan.

PLANNING NOTES

Use it outdoors only, and never under an overhead structure that can burn.
These sizes are with the lid closed. Ask us for the size with the lid open before you plan the space.
It cooks on charcoal. The gas burner only lights the charcoal and is switched off after lighting.