ALL SIZES IN MILLIMETRES

Weber Q3200N+ with Permanent Cart

Gas braai with two main burners and side shelves, on its permanent cart

01 FRONT VIEW, LID CLOSED

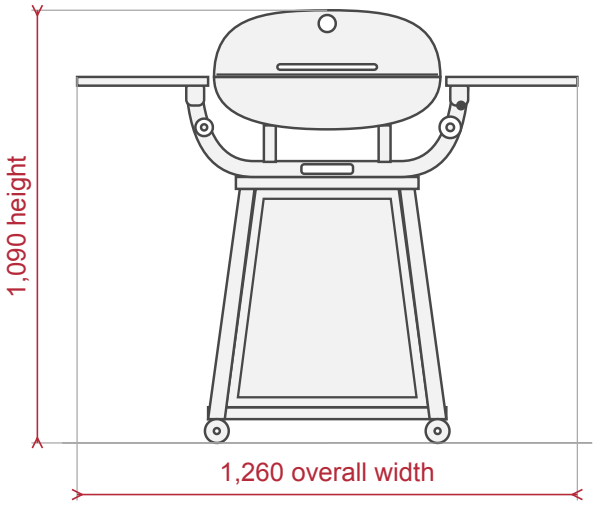

2 main burners

02 SIDE VIEW, LID CLOSED

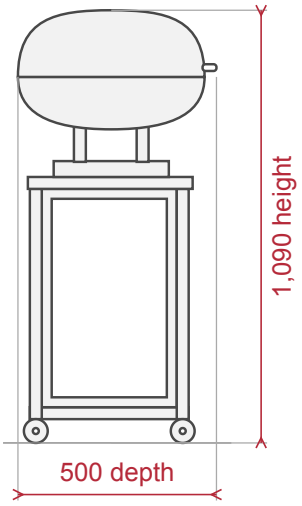

Front at the right.

03 FRONT VIEW, LID OPEN

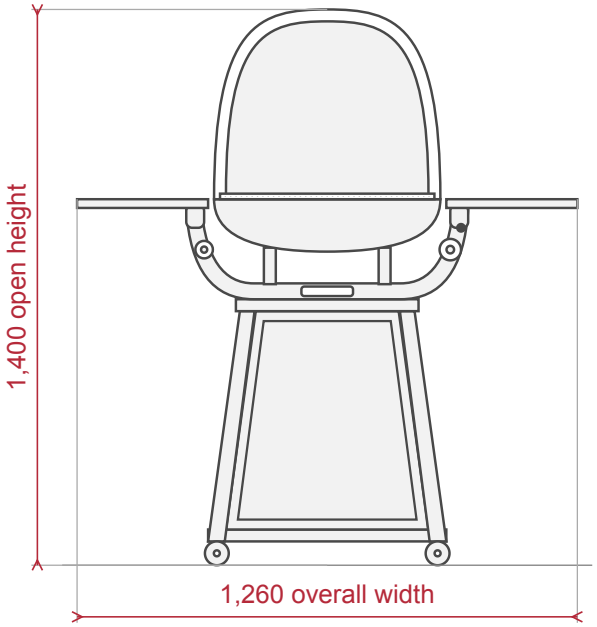

Side shelves and cooking grates.

04 SIDE VIEW, LID OPEN

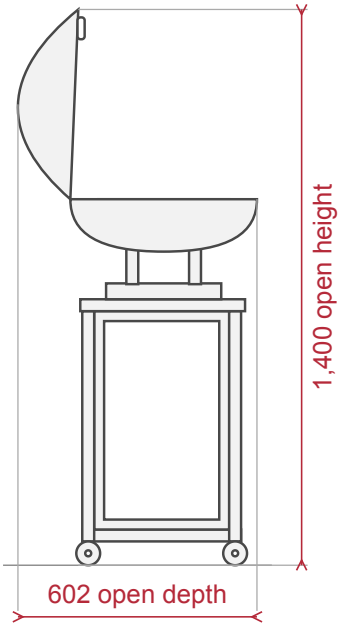

Front at the right. The lid opens to the back.

ALL SIZES IN MILLIMETRES

Weber Q3200N+ with Permanent Cart

05 TOP VIEW, LID CLOSED

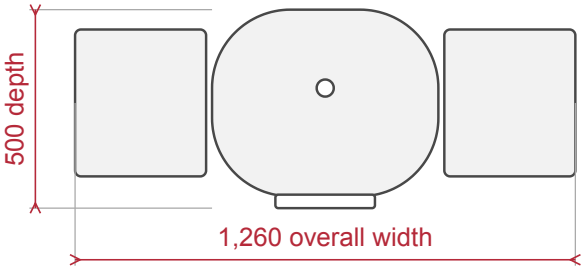

Front at the bottom.

06 COOKING GRATES, LID OPEN

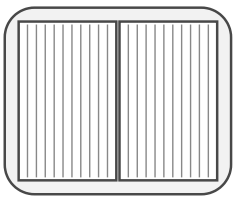

Cooking grates.
2 main burners.
Front at the bottom.

PLANNING NOTES

These are product sizes for the complete braai on its cart.
With the lid open, the braai is 1,400 high and 602 deep.
Allow room for the open lid and space to work around the braai.
This model comes with its permanent cart.
Check the model and the local gas connection before you order.
Ask us to confirm the sizes before you plan a tight space.