Safe Appliance

Since 1983

CHAD-O-CHEF

Lifestyle products

ELEGANCE
FLUELESS GAS FIREPLACE
INSTALLATION & OPERATING INSTRUCTION MANUAL

Please read these instructions carefully before installation and operation. Retain these instructions for future reference.



VFE210

These appliances conform to the requirements of SANS 1539

For permit number see: https://lpgas.co.za/resources/permitted-appliances-database/

STYLE • SAFETY



CONGRATULATIONS

on your purchase of a

CHAD-O-CHEF FIREPLACE

and WELCOME to the

CHAD-O-CHEF

family

QUALITY THAT LASTS

TABLE OF CONTENTS

General Instructions and Safety Notes 2-3

Specifications 4

INSTALLATION REQUIREMENTS 5

INSTALLATION INSTRUCTIONS For Gas Installer 6-9

MERTIC VALVE & PUCK: Operating Instructions 10-12

MERTIC VALVE: Pressure Testing 12-13

Changing the BATTERIES 14-15

Checklist For Gas Installer 16

Caution 16

Warnings 17

Cleaning 18

Servicing 18

Guarantee 19

Manufacturer Details 19

GENERAL INSTRUCTIONS AND SAFETY NOTES

Thank you for purchasing your new CHAD-O-CHEF Gas Fireplace manufactured to the highest standards and compliant to SANS 1539.

1. This appliance may only be installed by a registered gas installer with the South African Qualification and Certification Committee for Gas (SAQCC Gas) for the applicable gas type. Registered Gas Installers can be found and verified on the LPGSA website.
   - For LPG, the appliance must be installed in accordance with the requirements of SANS 10087-1.
   - For Natural Gas (NG), the appliance must be installed in accordance with the requirements of SANS 827.

   Cognisance must be given to local fire authority regulations and/or local bylaws applicable to the area. Upon completion of the installation, the installer can explain and demonstrate the safe operation applicable to the appliance and the installation. You will be asked to sign acceptance of the installation and be provided with a Certificate of Compliance (COC) for safekeeping.

2. This appliance is designed to provide radiant and convection heat both efficiently and safely. This requires that the appliance is installed correctly in an adequately ventilated area as the appliance consumes oxygen in its normal operation

   No permanent ventilation is required if the room volume (m^3) matches or exceeds the minimum requirement specified for the applicable appliance (see pg.4), although an opening window is recommended. Should the room size be smaller than the minimum room volume, permanent ventilation will be required. This volume may include 50% of adjoining rooms connected by permanent openings exceeding 1.5m^2 in floor size, but not rooms separated by a closable door.

3. Where permanent ventilation is required, two openings shall be installed, with one at high level and one at low level. Each opening shall have a free cross sectional area of not less than 6.5cm^2 per mJ/h of heat input. The heat input of other gas, wood, coal, paraffin, ethanol or similar appliances must be included in the calculations. It is the installer's responsibility to do these calculations on behalf of the homeowner.

4. The maximum room sizes specified on pg. 4 under specifications are recommended and may vary according to factors such as home insulation, materials, climate and so fourth.

5. DO NOT install in bathrooms, bedrooms, toilets or saunas.

6. The manufacturer and /or its agents and distributors will not be held responsible for injuries or damages caused by illegal, faulty or incorrect installation or use of the appliance.

7. Read more about LPG safety on our website: https://chad-o-chef.co.za/how-safe-is-lpg-in-your-home/

   Note: Upon initial light-up of your new fireplace, some fumes may be emitted from the unit. This is normal and should discontinue within a few hours of normal operation. Accordingly, the room should be well ventilated with all windows open during this period.

SPECIFICATIONS

Select the applicable size, model and gas type & follow the instructions appropriately:

Model	VFE200	VFE200-N
Gas type	LPG	Natural Gas
Operating pressure	2,8 kPa	2.0 kPa
Min Regulator size to comply with SANS 1237	2 kg/hr	N/A
Max. gas consumption	0.88kg/hr	N/A
Max. mJ input	44 mJ/hr	N/A
Max. kW input	12 kWh	
Gas inlet connection	Ø8mm compression	
Ignition	Piezo Spark	
Oxygen depletion system (Pilot)	ODS min 18.5% O2	
Min Room size without permanent ventilation	220m³	
Max room size for effective usage	489m³ (147m²)	

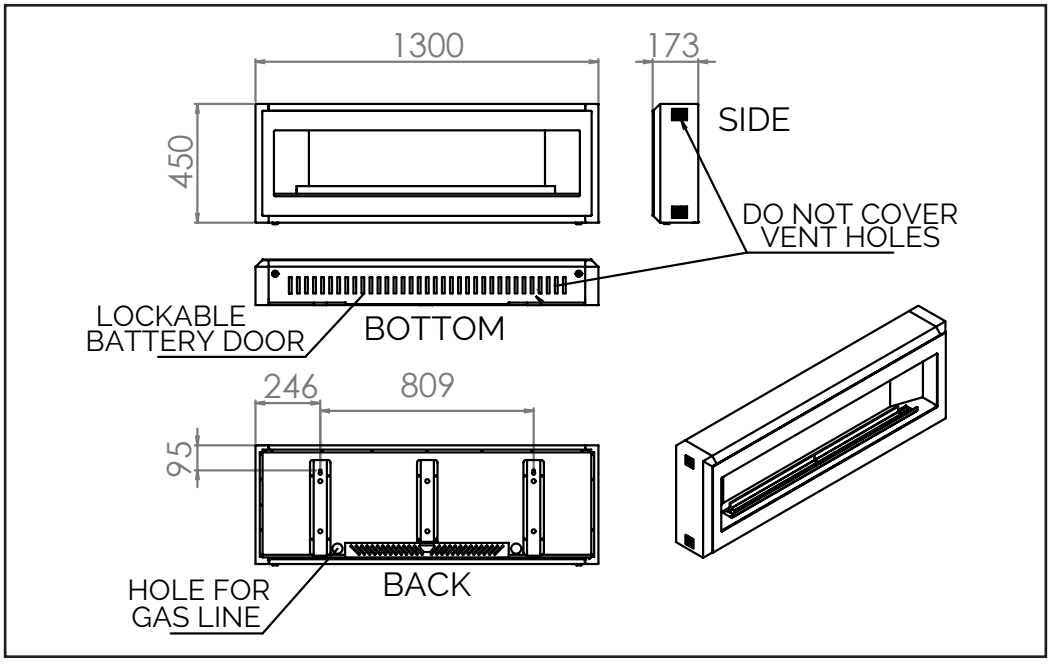

INSTALLATION REQUIREMENTS

The Elegance Fireplace is designed to hang on a wall using 2 wall bolts fitted into the wall.

Choosing a site:

This fireplace may be installed in any room in your home except for bedrooms, bathrooms, toilets and saunas. Avoid areas where there are strong draughts, which may be generated by open doors. It is recommended that the fireplace should not be installed within 500mm of any air vent, as this could affect the working of the ODS.

Clearances:

Combustible materials are defined as wood, fabrics, or other materials likely to burn when exposed to the flame. Any other material which is likely to discolor, melt, or lose shape when exposed to moderate heat, should fall into the same category.

Clearances to combustible materials:

Min clearance to the sides	100 mm
Min clearance to the sides for curtains & fabric	500 mm
Min clearance to the ceiling	800 mm
Min clearance to a floor (including carpet)	150 mm
Min clearance to combustible furniture in front	1000 mm

A heat resistant masonry shelf may be fitted 500mm above the fireplace but under no circumstances should any electrical equipment such as a TV be positioned above. Any ornaments positioned above the fireplace must be able to withstand the elevated temperatures and moisture. No combustible materials whatsoever must be used or placed above the fireplace.

Should these guidelines not be adhered to, your fireplace & surrounds will be at risk for damage, and the manufacturer will not be held liable.

INSTALLATION INSTRUCTIONS FOR QUALIFIED GAS INSTALLER

Unpacking

Carefully undo strapping to separate loose parts. Keep the plastic PVC protective sheeting on until installation is complete.

Positioning and Sizing

Confirm that the size of fireplace chosen is the right size for the room, and that the gas type is suitable for the installation (pg.4). Ensure that the vent holes along the sides and bottom of the fireplace are not obstructed & ensure that the fireplace is installed high enough so that the door located at the bottom of the fireplace can open fully.

Mounting the Fireplace

The Elegance Fireplace is designed to be hung on a wall, using the 2 wall bolts supplied, set at a suitable height.

1. Place the drilling stencil provided on the wall at the appropriate height and straighten using a spirit level.
2. Using the stencil, mark the 2 spots on the wall that you will need to drill into, and install the 2 x wall bolts.
3. The wall bolts will fit into the corresponding keyhole slots set at the back of the fireplace. Ensure that the fireplace is fitted securely.

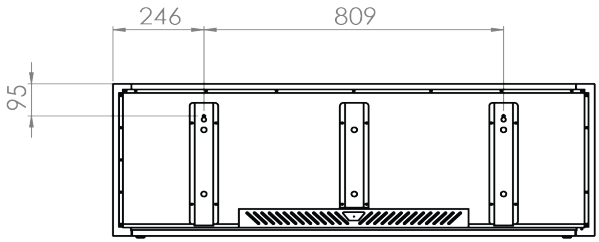

Connect up according to SANS 10087-1 for use with LPG, or according to SANS 827 for use with Natural Gas.

Connect a copper pipe from the gas supply via a regulator, complying with SANS 1237, to the Ø8 compression fitting supplied on the connecting pipe, taking into account the distance from the gas supply, to calculate the size of the copper pipe.

Connecting the gas tubing to the Mertic Valve Main Gas (Tubing Connections)

1. Slip nut and ferrule over tubing.
2. Slide nut and ferrule into place and insert tubing into inlet connection until it bottoms. Turn finger tight.
3. Use a 17mm spanner to tighten nut about 1 turn beyond finger tight, while holding the pipe with a 14mm spanner.

Setting up the fireplace

1. Place the burner plate inside the fireplace.
2. Place your 2 x burners inside the burner plate, with the venturi facing the gas jets. Ensure the burners are seated correctly.

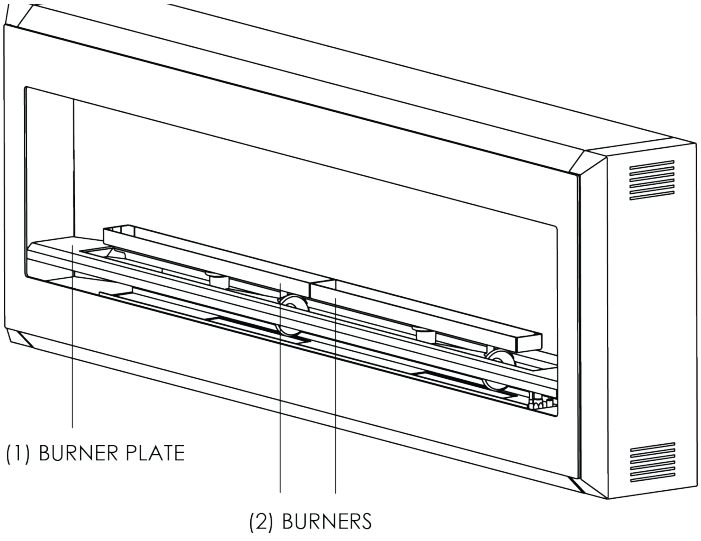

3. Insert the 2 x Glass Walls into the gaps provided behind the burners.
4. Insert the angled steel Deflector Plate into the gap provided in front of the burner. The angle should be facing forwards, toward you.
5. Fill the burners with the special glass pebbles supplied.
   Use only the number of glass pebbles supplied and do not substitute for alternative brands.

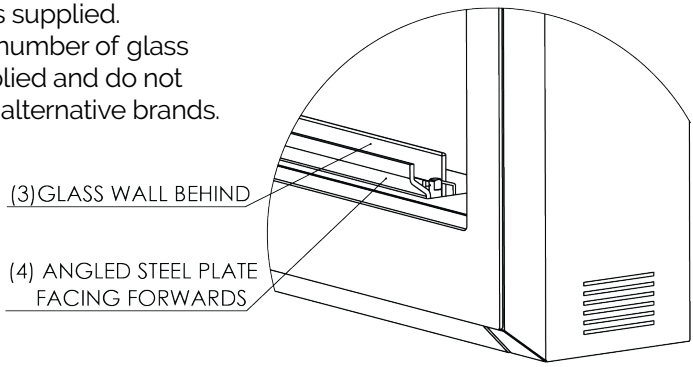

Setting up the Mertic Valve

The Installer is expected to set this up and show the customer how to operate it correctly on completion.

Synchronization of the Receiver & The Puck/Remote

(First time use only)

1. Insert batteries into the Puck/Remote as well as the Receiver located inside the fireplace.
   (See instructions on inserting batteries on pg 14)

2. Ensure that the manual knob is turned to the **ON** position.



Manual Knob should be in ON Position

Main Valve Knob should be in OFF Position

3. The receiver has to learn the Puck code:
   Press and hold the receiver's reset button (see below) until you hear two beeps. After the second, longer beep, release the reset button. Within the subsequent 20 seconds press the "–" button on the handset. Two short beeps confirm the code is set.



NOTE: This is a one-time setting only, and it is not required after changing the batteries in the handset or receiver.

NOTE: The receiver transmits and receives signals (bidirectional) and the handset transmits signals (unidirectional).

The handset and receiver sync status information every 4 to 6 min up to 1 h.

Testing and Commissioning

Turn on the gas supply and test for leaks with soapy water.
Ensure that the **OPERATING PRESSURE is 2,8 kPa at the control valve for an LPG connection, or 2.0 kPa for a Natural Gas connection**.
(See Pressure Testing on pg. 12-13)

Briefing the customer

All instructions must be handed over to the user for safekeeping. Instruct the customer how to turn the gas on and off and how to light and control the fire. After commissioning the unit, the customer should be instructed on the safe use of it and the need for regular servicing. Frequency of service depends on usage but must be carried out at the first sign of malfunction and at least once in 2 years.

MERTIC VALVE & PUCK/REMOTE OPERATING INSTRUCTIONS

The Puck is a smart control that works in conjunction with the GV60 / Symax system. Its basic functions include turning the fire on and off and turning the flame height up and down.

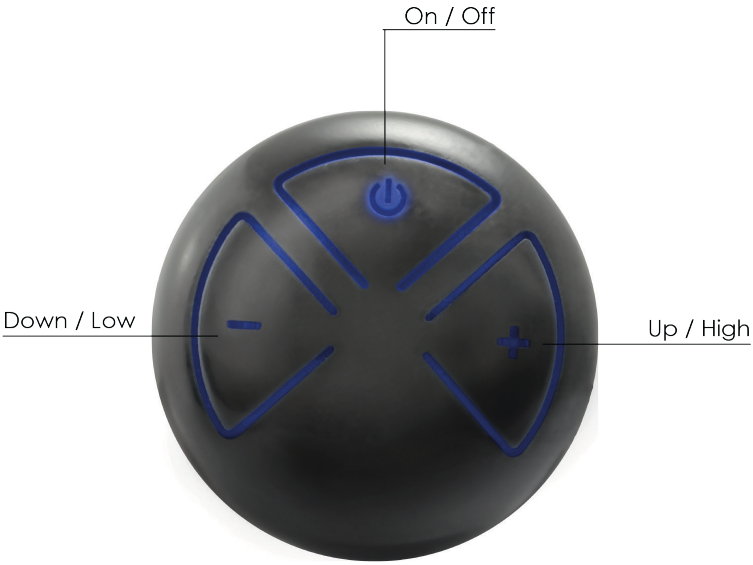

Modes of operation

NOTE: When the pilot ignition is confirmed, motor turns automatically to maximum flame height

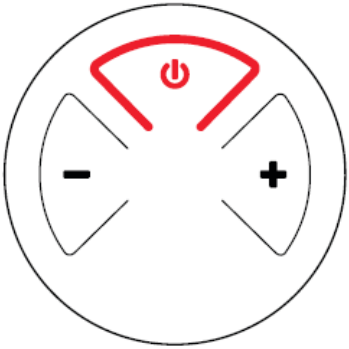

TURN ON & OFF

- Press and hold the button until two short beeps confirm the start sequence has begun; release button.
- Main gas flows once pilot ignition is confirmed.
- Press and hold the button to turn OFF.

MERTIC VALVE & PUCK/REMOTE OPERATING INSTRUCTIONS

NOTE: If the pilot does not stay lit after several tries, turn the main valve knob to the OFF position (See pg. 8)

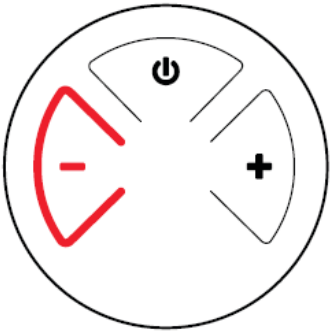

STANDBY MODE (PILOT FLAME)

Press and hold the "–" button to set appliance to pilot flame

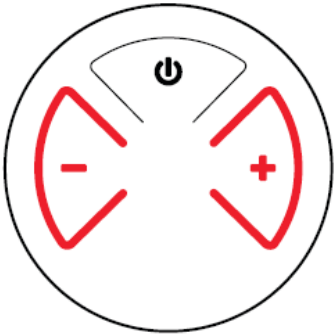

FLAME HEIGHT ADJUSTMENT

To increase flame height press and hold "+" button.
To decrease flame height or to set appliance to pilot flame, press and hold "–" button.

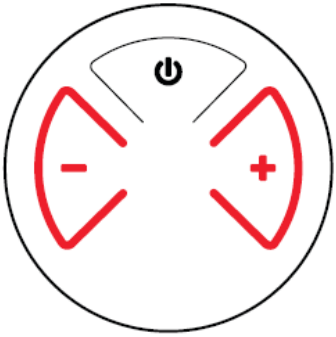

DESIGNATED LOW FIRE AND HIGH FIRE

To go to high fire, double-click "+" button.
To go to low fire, double-click "–" button.
NOTE: Flame goes to high fire first before going to low fire.

MERTIC VALVE & PUCK/REMOTE OPERATING INSTRUCTIONS

Problem Shooting:

Low Battery Receiver

With low battery power in the receiver the system shuts off the fire completely. This will not happen if the power supply is interrupted.

System Override Shutoff

12 Second Shutoff

If the fire will not shutoff by pressing the power button, press and hold the power button for 12 seconds to shut the fire off.

MERTIC VALVE: PRESSURE TESTING

The operating pressure should be according to the data set out in the SPECIFICATIONS on pg. 4. The fireplace is factory set to work at these pressures and any significant variation could indicate a supply problem.

If the pressure is too high or too low, then check the inlet pressure, by the following procedures.

(Continued on next page)

MERTIC VALVE: PRESSURE TESTING

1. Before conducting a pressure test, ensure that the in-line shut-off valve is closed.
2. Access the valve by unlocking the bottom flap of the fireplace (See page 14 *changing the batteries*)
3. Locate the Inlet test point as depicted in the diagram below:

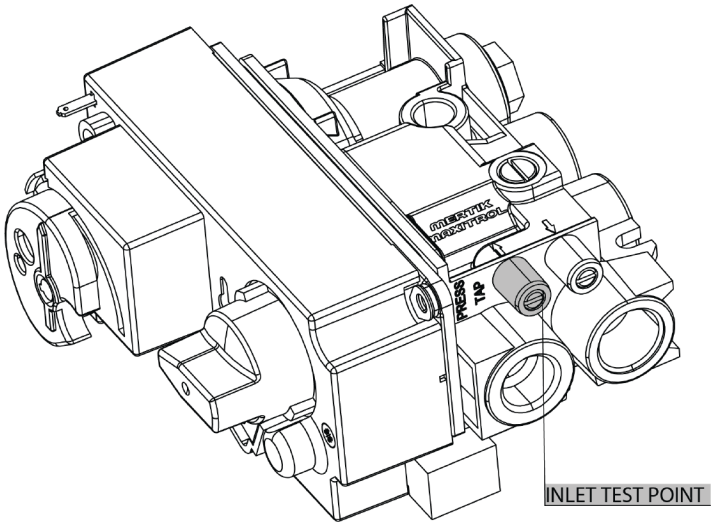

5. Open the testing point by loosening the inlet test point screw.
6. Connect your pressure gauge to the open testing point.
7. Re-open the in-line shut-off valve and ignite the fireplace as per the operating instructions. Make sure to set to HIGH for the duration of this process.
8. Allow the fireplace to run for at least 5 minutes in order to stabilise the line pressure. Once stabilised, set the operating line pressure to 2.8kpa (for LPG or 2.0kPa (for NG). Do not set the pressure while the line is static, as this will result in inaccuracy.
9. Once set, close the shut off valve to extinguish the flame and stop the gas flow.
10. Ensure that the inlet test point screw is free of debris & replace tightly to close the testing point.
11. Conduct a leak test to ensure that there are no leaks at the testing point.

CHANGING THE BATTERIES

The remote control holds 2 x AAA Batteries that will need to be changed periodically. This can be easily done by the user as needed.

The receiver also holds 4 x AA Batteries that will need to be changed periodically. Follow these instructions to locate and replace the batteries. This should be done by the user or service technician as often as needed.

1. To locate the valve batteries, use the key provided to unlock the bottom flap of the fireplace as depicted below:

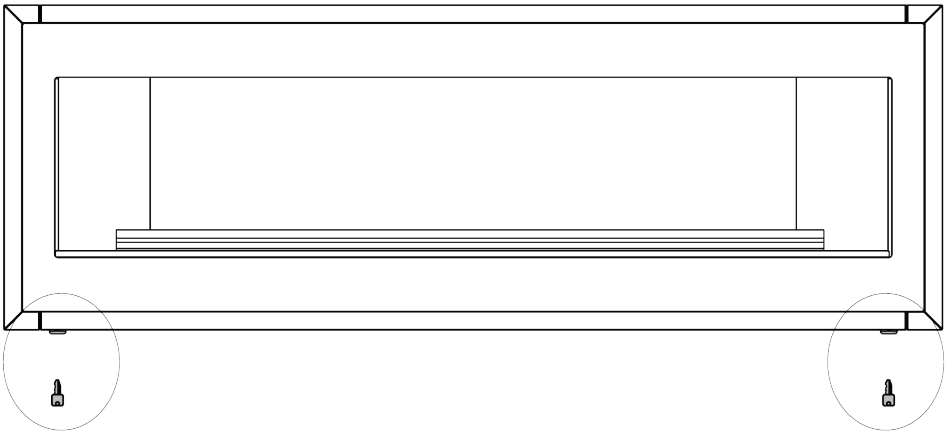

2. You will now be able to open the bottom flap to reveal the receiver's battery box as below:



(Continued on next page)

3. Open the battery box and replace the 4 x AA batteries. Ensure that you use a good brand to avoid leakage.

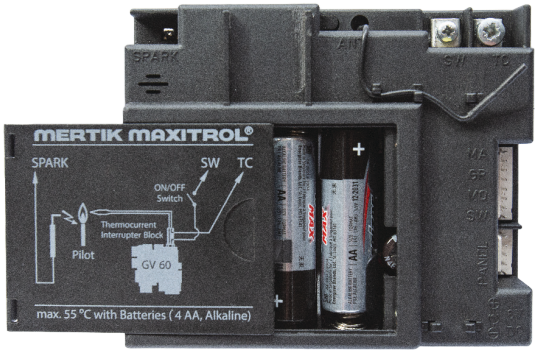

4. Test the unit before closing the battery box and locking the bottom flap.

IMPORTANT

- Make sure that you are able to access the receiver's battery compartment easily.
- To avoid damaging the electronics, do NOT use metal tools to remove the batteries from the handset / receiver.
- Do NOT expose batteries (including during storage) to direct sunlight, excessive heat, fire, moisture, or severe impact. Each of these conditions can cause the batteries to overheat, leak, and / or explode.
- Do not use rechargeable batteries, as they do not provide a suitable amount of power for the correct operation of this unit.
- Do not use old or mix used and new batteries. Doing so can lead to erratic operation or even malfunction of the control system. Insert brand new, preferably matching batteries to begin with and follow the battery replacement recommendation below.
- We strongly recommend replacing both remote (2 x AAA) and receiver (4 x AA) batteries at the beginning of each winter.
- Only reputable alkaline brands (i.e. Energizer) should be used — do not use low-cost or unknown brands.

CHECKLIST FOR GAS INSTALLER

Before calling the manufacturer, ensure that all the checkpoints below conform. Refer to the latest SANS 1539.

- ☐ Check there is gas in the gas bottle (if bottle is nearing empty change over to new bottle)
- ☐ Check that the inlet operating pressure is 2.8 kPa for LPG or 2.0 kPa for NG (whilst running). **If not correct:**
  - ☐ Check that the supply pipe is the correct diameter for the distance covered.
  - ☐ Check that the regulator is functioning correctly.
- ☐ The burners must be correctly positioned and sitting flush on the bottom plate,
- ☐ Jet is centrally aligned with the burner venturi.
- ☐ Check for spider webs in the venturi.
- ☐ The **Glass pebbles** supplied with Chad-O-Chef fireplaces must be inside the burner. Ensure that the right amount of glass pebbles placed on the fireplace are correct, as supplied by Chad-O-Chef.
- ☐ The room must be bigger than the minimum room size specified for your fireplace (See Page 4) If not:
- ☐ Ensure that adequate ventilation requirements have been met. (See Page 2)
- ☐ Ensure that the remote and receivers batteries are still working, if not replace.

CAUTION

Do not tamper with jets, burners or regulator settings. NEVER MODIFY OR BEND THE THERMOCOUPLE TO MAKE THE PILOT STAY ALIGHT. CHAD-O-CHEF products are preset and tested to function efficiently and are approved by the LPGSA.

Should a burn back occur, i.e. the jet catching alight at the entry to the burner with a noticeable loud rushing sound: Turn the gas off immediately and relight after 1 min. If condition persists, contact your gas installer.

Should a leak in the gas be detected, turn off the gas at the gas cylinder, and contact your installer immediately.

Should there be an unexplained shutdown, which could be the result of insufficient oxygen in the room, shut off the gas supply, then open windows and doors in the room, wait 5 min before attempting to restart. If condition persists, contact your gas installer.

WARNING

This is an un-vented gas heater. It uses air (oxygen) from the room in which it is installed. Provisions for adequate ventilation must be provided. Refer to appropriate section of the user manual.

WARNING
CARBON MONOXIDE POISONING
CAN LEAD TO DEATH

Carbon monoxide poisoning: Early signs of carbon monoxide poisoning resemble the flu, with headaches, dizziness or nausea. If you have these signs, the heater may not be working properly. Get fresh air at once. Have the heater serviced. Some people are more affected by carbon monoxide than others. These include pregnant women, people with heart or lung disease or anemia, those under the influence of alcohol, and those at high altitudes.

WARNING

Fire or Explosion Hazard. Do not disassemble
the gas valve; it contains no serviceable components.
Attempted disassembly or repair
can cause property damage, severe injury or death.

WARNING

This appliance becomes hot when in use.

WARNING

DO NOT Cover vent holes. See the spec drawing on pg.4 where the vent holes are located. Also refer to the minimum clearances to combustible materials on page 5.

CLEANING

For all surfaces, the fireplace can be wiped clean with a damp microfiber cloth. If a slightly more aggressive cleaning is required you can use a little sunlight liquid to remove finger marks. Should soot deposits appear on the sliver stainless steel, first clean with a dry cloth when cold, and follow up with a cloth dampened with methylated spirits and a final buffing with a dry cloth.

- DO NOT use any oil based cleaners, as the oil tends to discolour the stainless steel when heated.
- DO NOT use any abrasive cleaners or cloths, especially on the mirror finishes, as they can scratch very easily.
- See more about the care and maintenance of stainless steel on our website: https://chad-o-chef.co.za/chad-o-chefs-care-maintenance-guide-for-stainless-steel/

SERVICING

Servicing must be carried out by a qualified gas installer.
Frequency of service depends on usage, but must be carried out at the first sign of malfunction and at least once in 2 years. Batteries should be changed at least every year at the start of the season and can be done by the user if the fireplace is not due for a service.
Spiders are the biggest pests, because they tend to occupy the smallest of holes which will be in the burner venturi or the pilot air holes. If spiders are a problem in the home, have your fireplace serviced just before the new season begins.

Suggested procedure for servicing:

1. Isolate the gas supply and work on a cold unit.
2. Replace all of the batteries in the remote & in the receiver.
3. Remove the glass pebbles inside into a temporary container.
4. Clean the burner and venturi by vacuuming.
5. Inspect the ODS pilot and clean the airways. Check the spark gap.
6. Inspect and clean the main jet
7. Re-assemble the components.
8. Turn on the gas supply and leak test.
9. Check pilot and burner for good ignition.
10. Light the fire and check pressure settings.
11. Check the safe operation of the unit.

GUARANTEE

Chad-O-Engineering (Pty) Ltd (COC) Guarantees cover all fireplaces manufactured by Chad-O-Chef for the duration of 2 years. Ts & Cs apply.

Refer to our website for more details on what is included in your guarantee & the appropriate steps to take when claiming:

https://chad-o-chef.co.za/guarantees/

MANUFACTURER DETAILS

Last Update: 2026/08/31

Manufactured By:

Chad-o Engineering
PO Box 986 Honeydew 2040
Tel: (011) 668 1910
Email: info@chad-o-chef.co.za
www.chad-o-chef.co.za