ALL SIZES IN MILLIMETRES

Weber Master-Touch 57 cm

Charcoal kettle braai on wheels, with the ash catcher underneath

01 FRONT VIEW / LID CLOSED

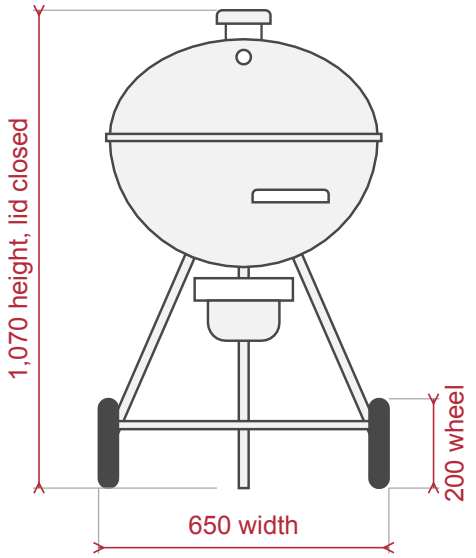

02 SIDE VIEW / LID CLOSED

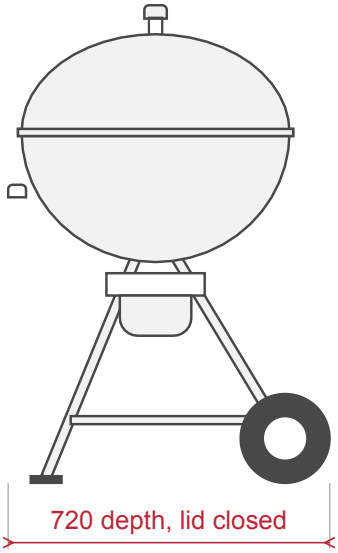

Front at the left.

03 SIDE VIEW / LID OPEN

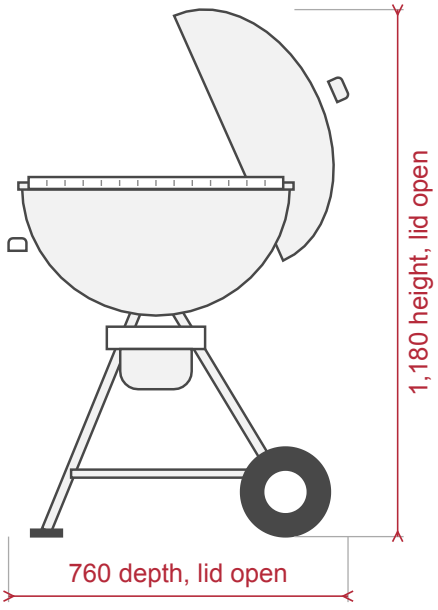

Front at the left. The lid hangs at the back.

04 COOKING GRATE

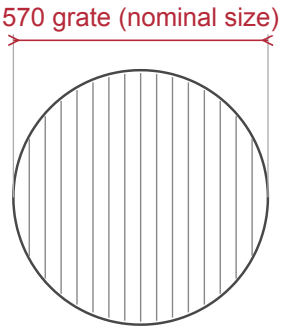

2,342 cm² cooking area

Seen from above.

BRAAI CULTURE

ALL SIZES IN MILLIMETRES

Weber Master-Touch 57 cm

05 SPACE AROUND THE BRAAI (PLAN, SMALLER SCALE)

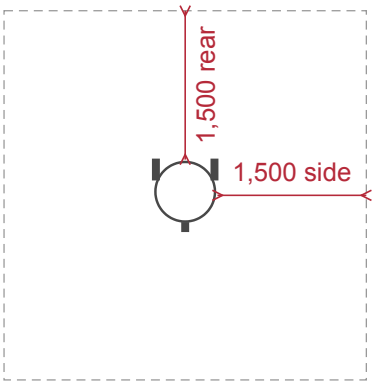

Front

Keep anything that can burn at least 1.5 m away, on every side and behind the braai.

PLANNING NOTES

These are the outside sizes of the assembled braai.
The 57 cm in the name is the nominal size of the grate.
Plan the space with the lid open: it needs room above and behind.