ALL SIZES IN MILLIMETRES

Homefires 700 Table Braai

Table braai: wood or charcoal, with an ash drawer and a potjie arm

01 FRONT VIEW

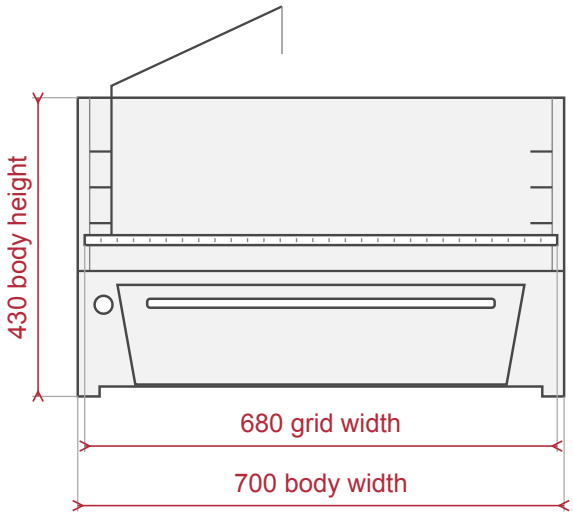

02 SIDE VIEW

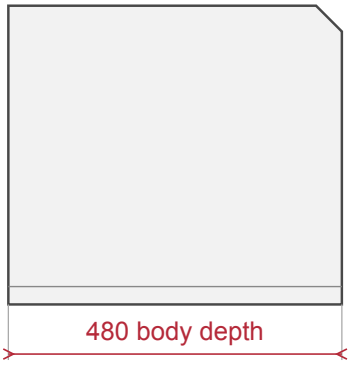

Front at the right.

03 TOP VIEW

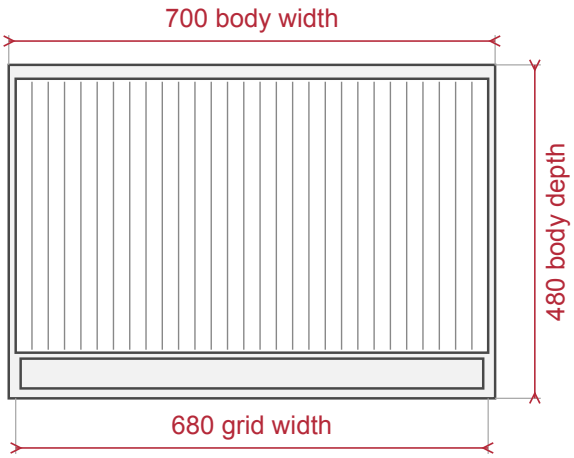

Front at the bottom.
The grid is height adjustable.

PLANNING NOTES

These are product sizes. Check your counter or your brick-built opening before you order.
Use it on its own as a countertop braai, or put it into an existing brick-built opening.
Included: the ash pan, the ash lid, the ash drawer, the grid and the potjie arm. There is no warming drawer.
Leave room above the braai for the potjie arm.