ALL SIZES IN MILLIMETRES

Jetmaster Medium Argentinian Grill

Argentinian grill: hand-wheel height adjustment, with a rotisserie included

01 FRONT VIEW

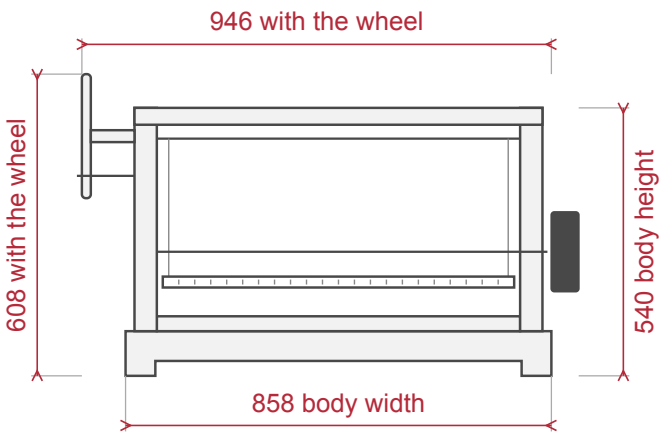

02 SIDE VIEW

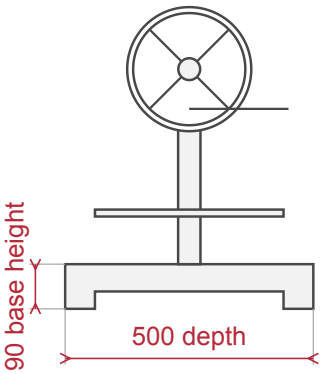

Seen from the wheel end. Front at the right.

03 TOP VIEW

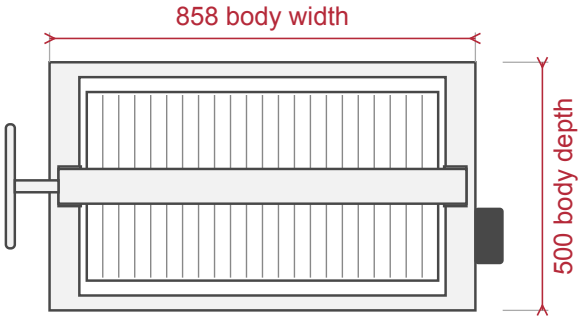

Front at the bottom. Hand wheel at the left.

04 OPTIONAL STAND (SMALLER SCALE)

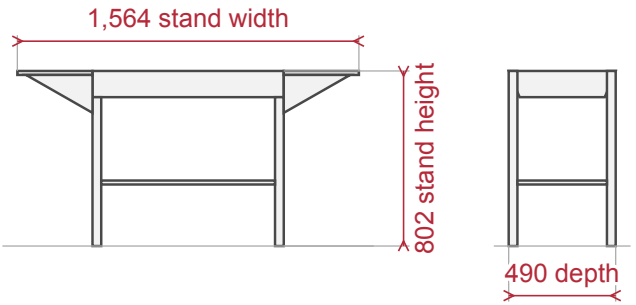

Left: from the front. Right: from the side, with the front at the right.

PLANNING NOTES

These are product sizes, not opening sizes. Have your installer check the complete setup.
Check the body and the full frame separately. The wheel and the frame extend beyond the body width.
Turn the hand wheel to raise or lower the V-grid above the embers.
Included: the grill with a height-adjustable V-grid, a rotisserie shaft and a battery-powered motor.
Lower ash and drip pans are also included.
A suitable support or the matching Medium stand is separate.
Do not use the Large stand sizes for this grill.