ALL SIZES IN MILLIMETRES

Homefires Gas Grate Double Sided 700 Vent Free

Double-sided vent free gas grate with a coal bed

01 FRONT VIEW

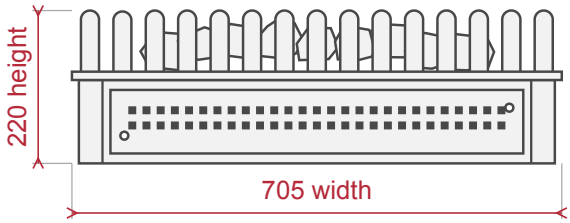

02 SIDE VIEW

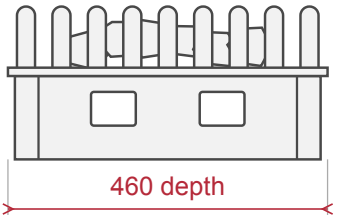

03 TOP VIEW: THE GRATE AND THE FUEL BED

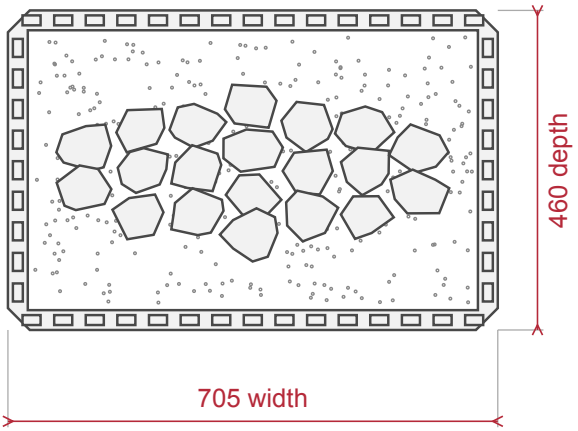

DOUBLE-SIDED

The steel fingers run round all four sides.

- Coal bed, in the middle
- Pale granules, round the coal bed
- Steel finger

PLANNING NOTES

These are product sizes, not a fireplace-opening size. Check your fireplace opening before you order.
Vent free: this is a flueless gas grate. The existing fireplace chimney is to be closed off.
Room volume: 107 m³ minimum, 438 m³ maximum. Maximum gas consumption: 0.79 kg/hr.
Powder coated steel. An access door gives you the control knob.
This grate is the LPG version. Mass: 27 kg.