ALL SIZES IN MILLIMETRES

FLAMM A2 Freestanding

Closed combustion wood fireplace with one wide glass door: flue on top

01 FRONT VIEW

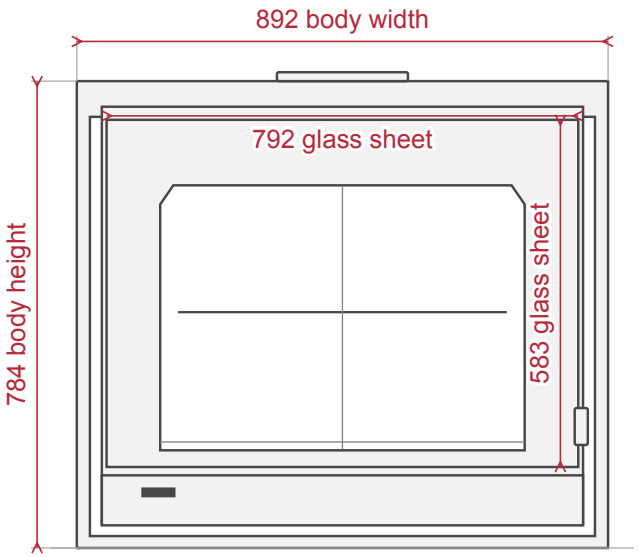

02 SIDE VIEW

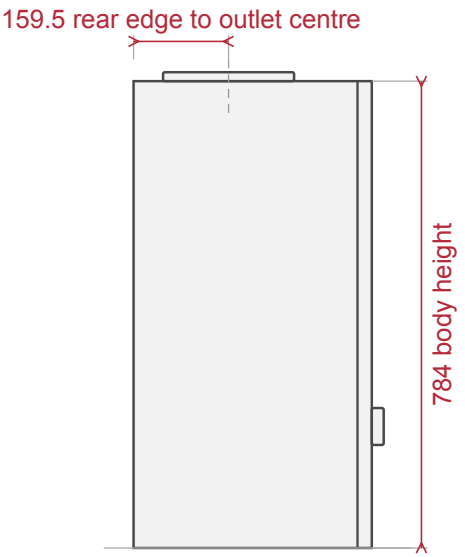

Back at the left. Front at the right.

03 TOP VIEW

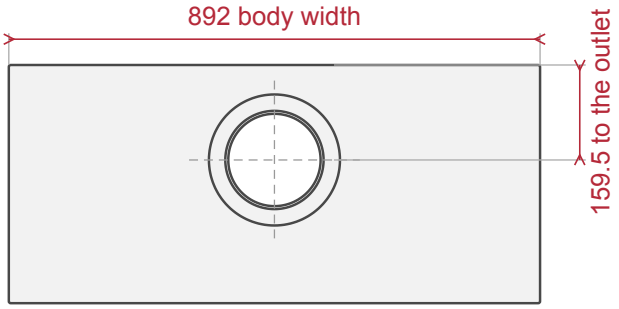

Back at the top. Front at the bottom.

04 FLUE OUTLET (LARGER SCALE)

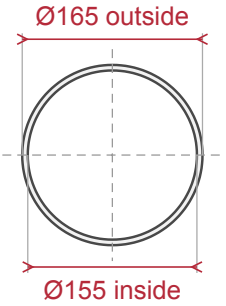

For a nominal 150 flue pipe.

05 FIREBOX LINING (SMALLER SCALE)

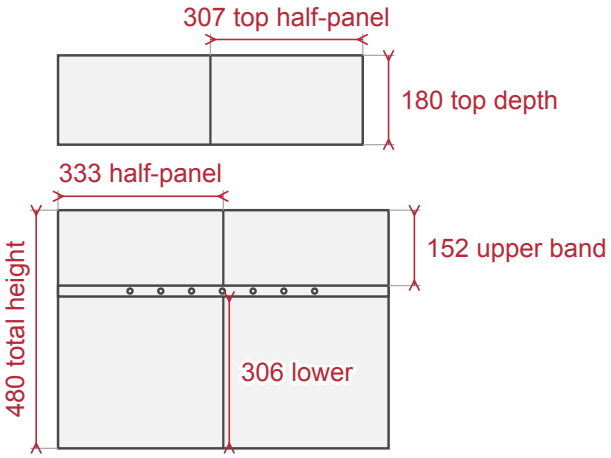

06 COMBUSTIBLE WALLS, TOP VIEW (SMALLER SCALE)

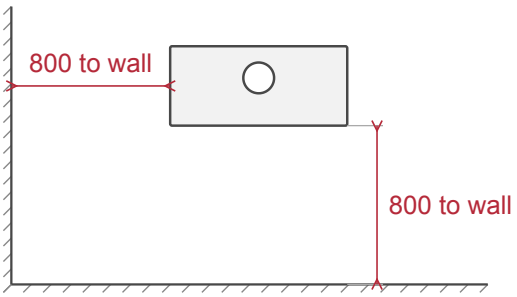

BRAAI CULTURE

ALL SIZES IN MILLIMETRES

FLAMM A2 Freestanding

07 FLOOR PROTECTOR, TOP VIEW (SMALLER SCALE)

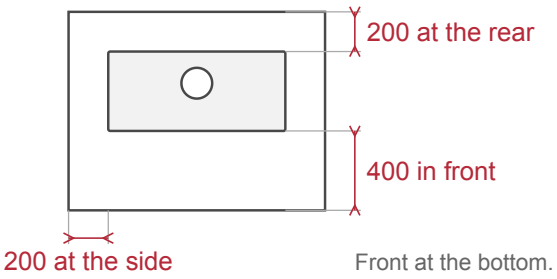

08 CEILING AND FURNISHINGS (SMALLER SCALE)

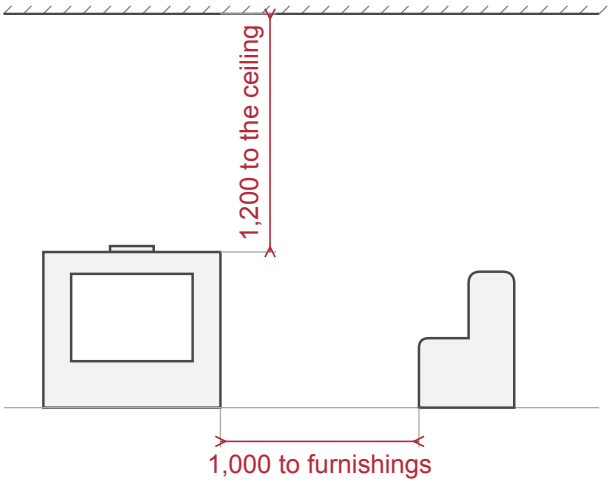

09 FLUE RUN AND FLUE ABOVE THE ROOF (SMALLER SCALE)

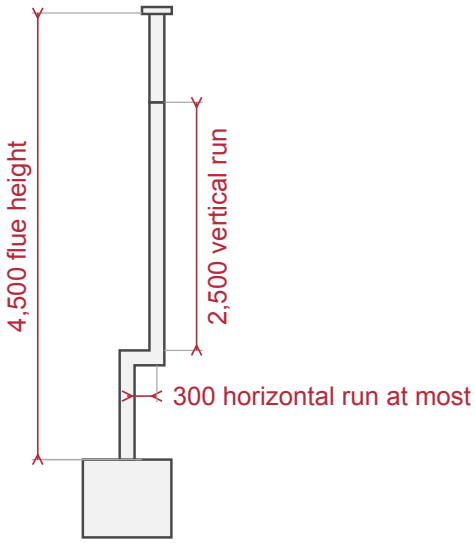

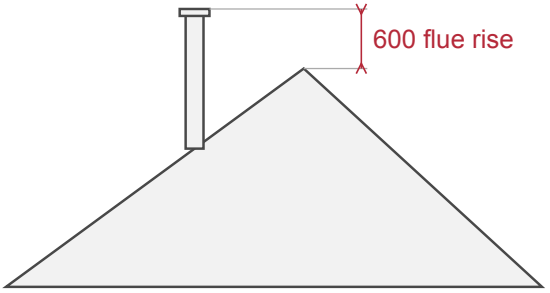

PLANNING NOTES

These are product sizes. Ask us to confirm the depth and the weight before you plan a tight fit.
Have an independent installer check the hearth, the clearances and the flue route for your building.
The hearth can be a 125 constructional hearth. In some cases it can be a 12 non-combustible board.
Where a firewall is needed, use 100 of brick, concrete or stone.
In a recess, leave a free air gap of 200 at the sides and the top and 50 at the rear.
These gaps are for airflow and do not define a cut-out.
A flue of about 4,500 could be satisfactory. Your installer decides the route for your building and wind.
The firebox is 5 mm steel with a vermiculite lining.
There is no ash pan, so clear the ash once the fire is out and cold.
Flue pipes, accessories and installation are not included. Send us a photo and your measurements for a flue quote.