ALL SIZES IN MILLIMETRES

FLAMM 605 with Log Base

Freestanding wood fireplace: closed combustion, a square firebox over an open log base

01 FRONT VIEW

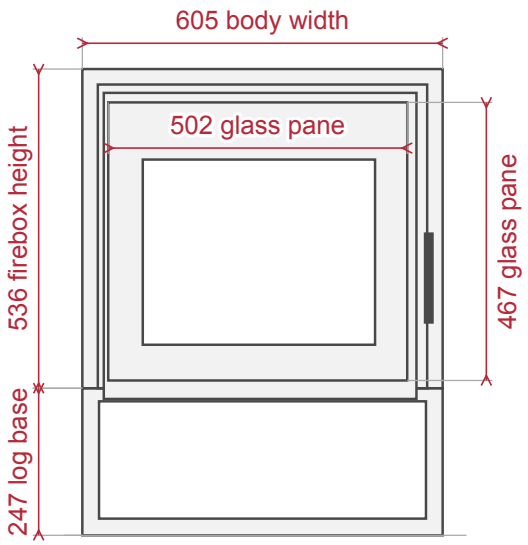

02 SIDE VIEW

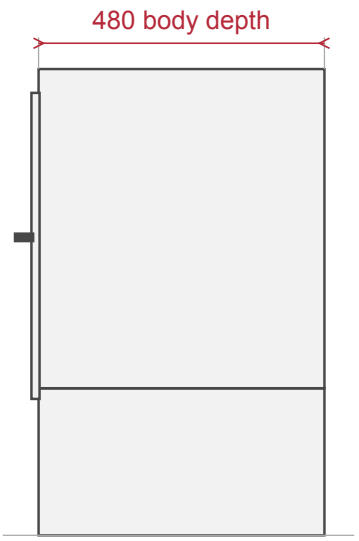

Front at the left. Back at the right.

03 TOP VIEW

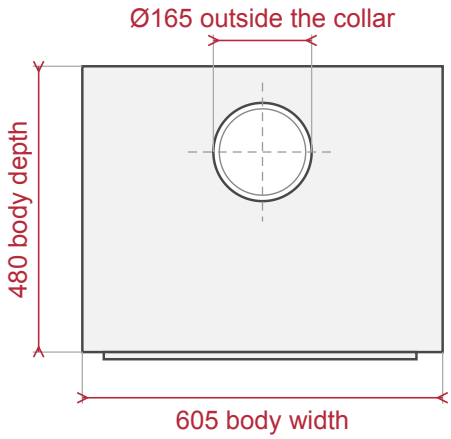

Back at the top. Front at the bottom.
For a nominal 150 flue pipe.

04 FIREBRICKS, TOP VIEW

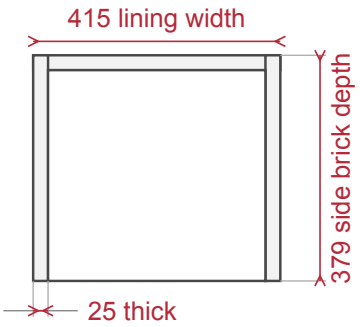

Front at the bottom.

BRAAI CULTURE

FLAMM 605 with Log Base

05 COMBUSTIBLE WALLS, TOP VIEW (SMALLER SCALE)

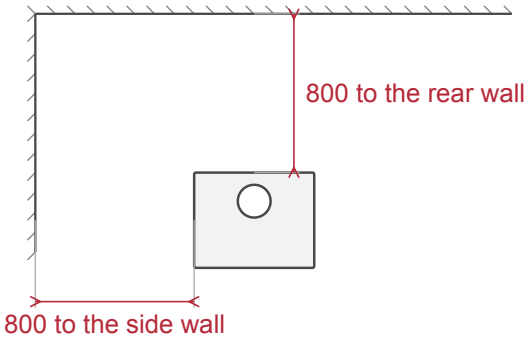

Back at the top. Front at the bottom.

06 FLOOR PROTECTOR, TOP VIEW (SMALLER SCALE)

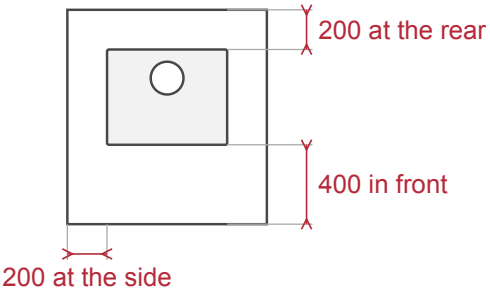

Front at the bottom.

07 CEILING AND FURNISHINGS (SMALLER SCALE)

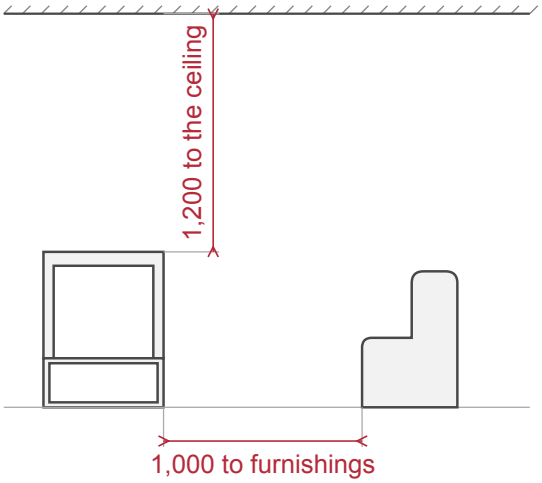

08 FLUE ABOVE THE ROOF (SMALLER SCALE)

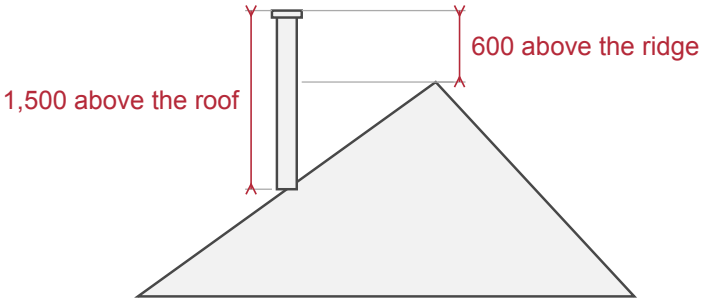

PLANNING NOTES

These are product sizes. Have an independent installer confirm the hearth, the flue route and the clearances.
Ask us to confirm the overall height before you plan a tight fit.
Use a solid, non-combustible constructional hearth 125 thick, decorative surface included.
In some cases, and not in a recess, a 12 sheet hearth may be allowed.
Your installer confirms which applies.
In a recess, leave a free air gap of 200 at the sides and the top and 50 at the rear.
Where a firewall is needed, it must be at least 100 of brick, concrete or stone.
The suggested minimum is 4,500 of effective flue height, after a site check.
A horizontal run may be at most 300 and must be followed by at least 2,500 of vertical flue.
A register plate must be non-combustible and at least 1.5 thick.
Chimney flue pipes, accessories and installation are not included. Send us a photo and measurements for a flue quote.