ALL SIZES IN MILLIMETRES

Al Fresco Grande Mosaic Pizza Oven

Wood-fire pizza oven for 2 or 3 pizzas, Abstract mosaic, with an optional mobile stand

01 FRONT VIEW

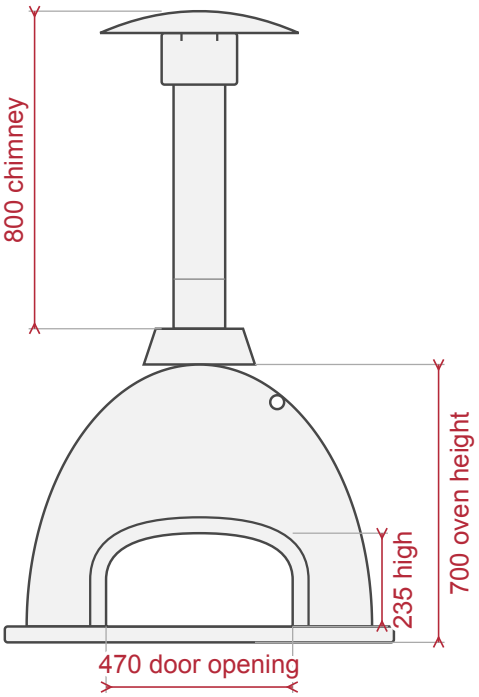

02 TOP VIEW

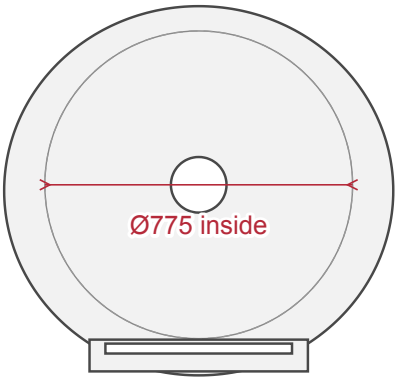

Front (door) at the bottom.

BRAAI CULTURE

ALL SIZES IN MILLIMETRES

Al Fresco Grande Mosaic Pizza Oven

03 OPTIONAL STAND, FRONT VIEW

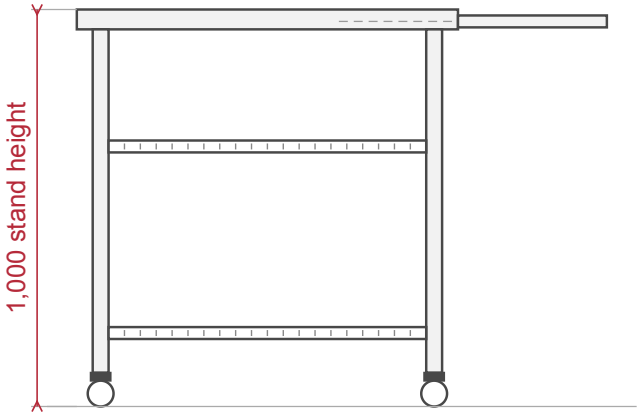

Oven not shown on the stand. Table shown slid out.

04 SIDE VIEW (OVEN)

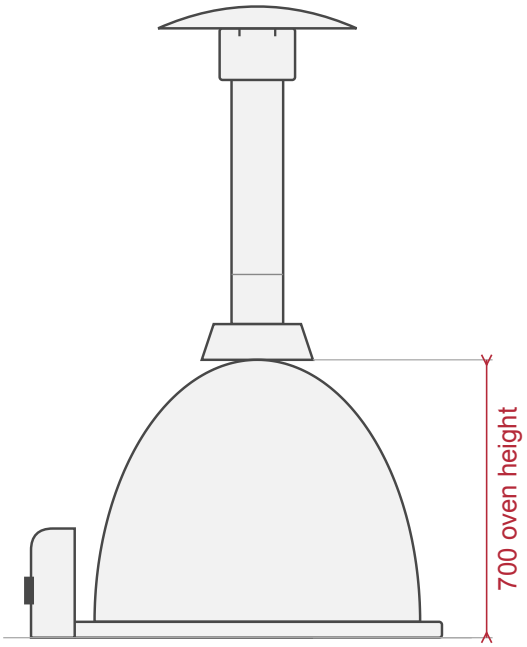

Front (door) at the left.

PLANNING NOTES

These are product sizes. Ask us for the oven width and depth before you build a counter or a base.
The oven weighs 120 kg. It takes two large or three regular pizzas at a time.
The door, the standard stainless-steel chimney, a pizza lifter, a coal rake and a thermometer come with the oven.
The mobile stand and the slide-out preparation table are optional extras.
Lock the stand wheels before you fit the chimney or use the sliding table.
Remove the chimney before you move the oven over uneven surfaces.