ALL SIZES IN MILLIMETRES

WIKING HB Slow Combustion Fireplace

Full cast-iron stove for dry wood, with one glass door and the flue on top or at the rear

01 FRONT VIEW

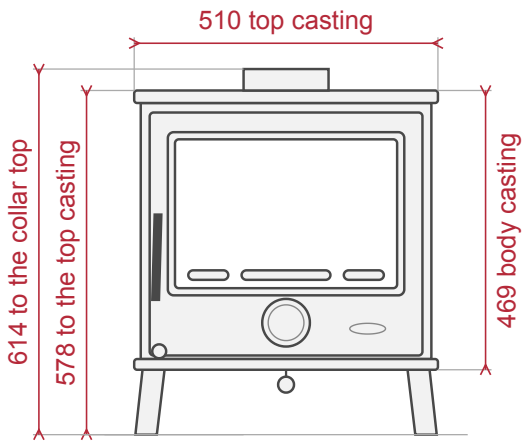

02 SIDE VIEW

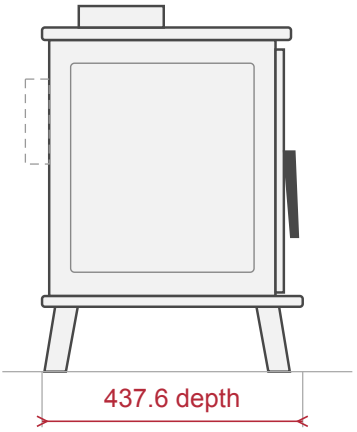

Back at the left. Front at the right.
The flue connects on top or at the rear (dashed).

03 TOP VIEW

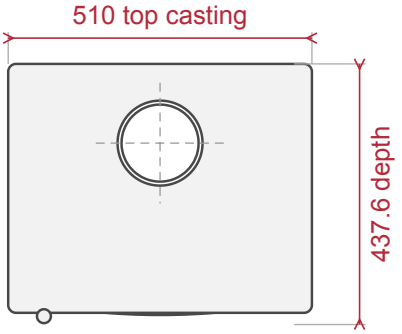

Back at the top. Front at the bottom.
For a nominal 125 flue pipe.

04 COMBUSTIBLE WALLS, TOP VIEW (SMALLER SCALE)

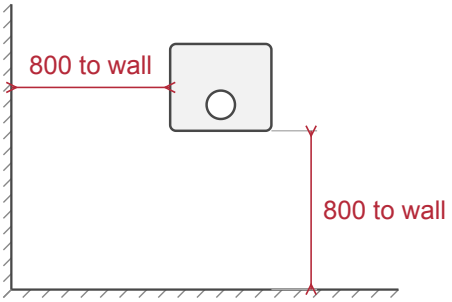

BRAAI CULTURE

WIKING HB Slow Combustion Fireplace

05 FLOOR PROTECTOR, TOP VIEW (SMALLER SCALE)

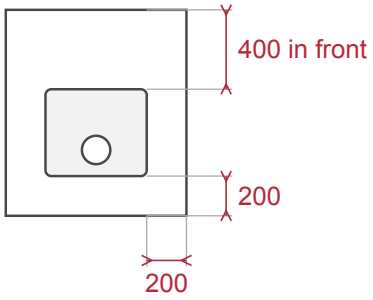

White: the floor protector. Front at the top.

06 CEILING AND FURNISHINGS (SMALLER SCALE)

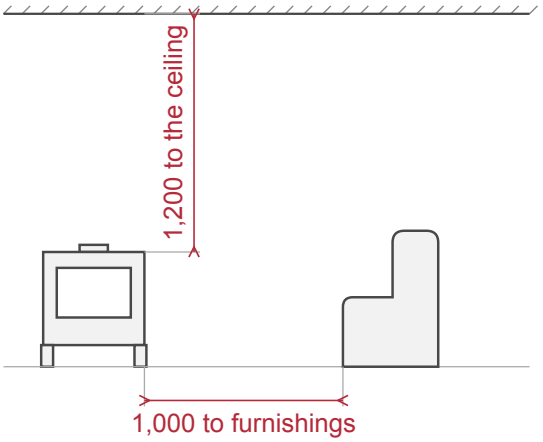

07 FLUE ABOVE THE ROOF (SMALLER SCALE)

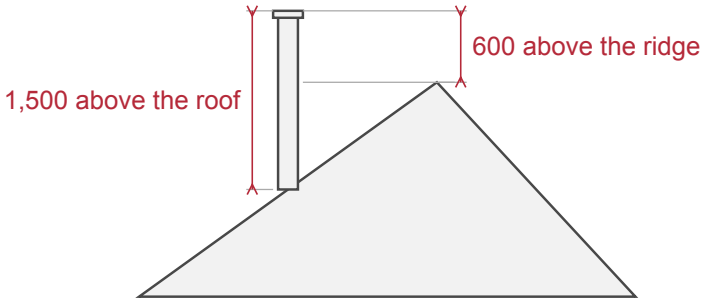

PLANNING NOTES

These are product sizes. Have an independent installer confirm the hearth, the flue route and the clearances.
The constructional hearth must be solid, non-combustible and at least 125 thick with its finish.
Out of a recess, a tested stove may stand on a non-combustible hearth at least 12 thick.
The hearth must reach 400 in front of the stove.
Where a firewall is needed, it must be at least 100 thick.
In a recess, leave a free air gap of 200 at the sides and top and 150 at the back. These gaps apply only in a recess.
Glass size 373 × 250. Net weight 102 kg. Burn dry wood.
Included: the ash pan and the riddling grate.
Three-year limited warranty on the stove body when registered within 30 days; otherwise 12 months.
Flue pipes, accessories and installation are not included. Send us a photo and measurements for a flue quote.