Homefires Braai Canopy

Wall-mounted braai canopy: black mild steel, in three widths

01 FRONT VIEW, 1,000 CANOPY

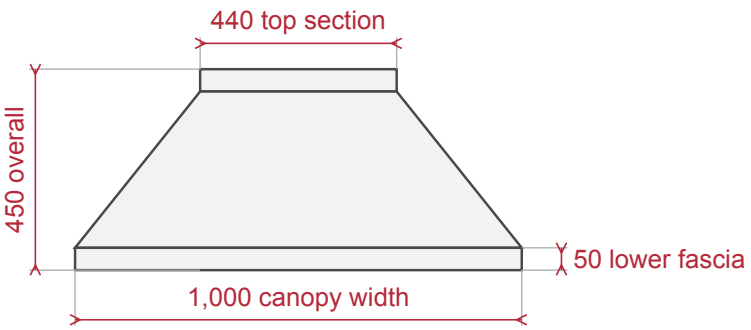

02 SIDE VIEW, 1,000 CANOPY

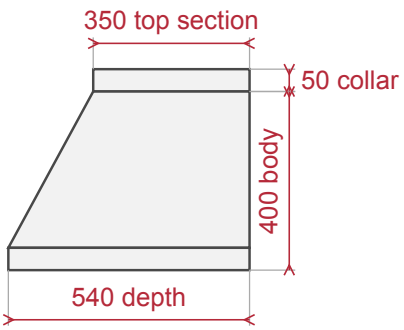

Front at the left. Straight back at the right.

03 TOP VIEW, 1,000 CANOPY

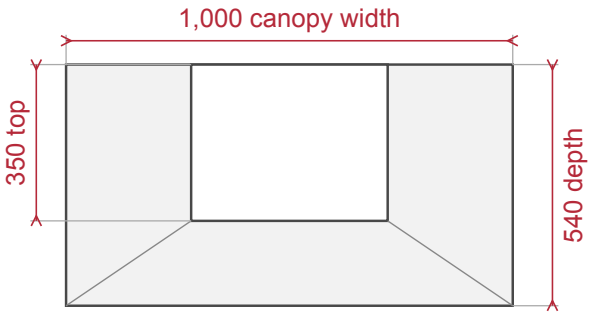

Back at the top. White: the open top section.

04 THE THREE SIZES

SIZE	WIDTH × DEPTH	HEIGHT	TOP SECTION	FLUE
1,000	1,000 × 540	450	440 × 350	440 × 340
1,200	1,200 × 540	450	500 × 350	500 × 350
1,500	1,500 × 600	450	500 × 350	500 × 350

Height with the collar. Flue: the flue size for each canopy.

PLANNING NOTES

These are canopy sizes. Do not use them as heat clearances.
Choose 1,000, 1,200 or 1,500. Check the width and depth of your braai and the position of the flue.
The body is 400 high and includes the 50 lower fascia. The collar adds 50 above it.
Have your installer check the mounting height, wall support, heat clearances and flue connection for your braai.
Have your installer check the mating connection and the full flue route before you order pipes or fittings.
Included: the canopy in your chosen size. The braai, flue pipes, cowls, fittings and installation are not included.
It works with a connected flue or chimney. A powered extractor is not included.