ALL SIZES IN MILLIMETRES

FLAMM 950 Double Sided on Log Base

Freestanding wood fireplace: closed combustion, double sided, a 5 mm steel firebox on a log base

01 FRONT VIEW, EITHER GLASS DOOR

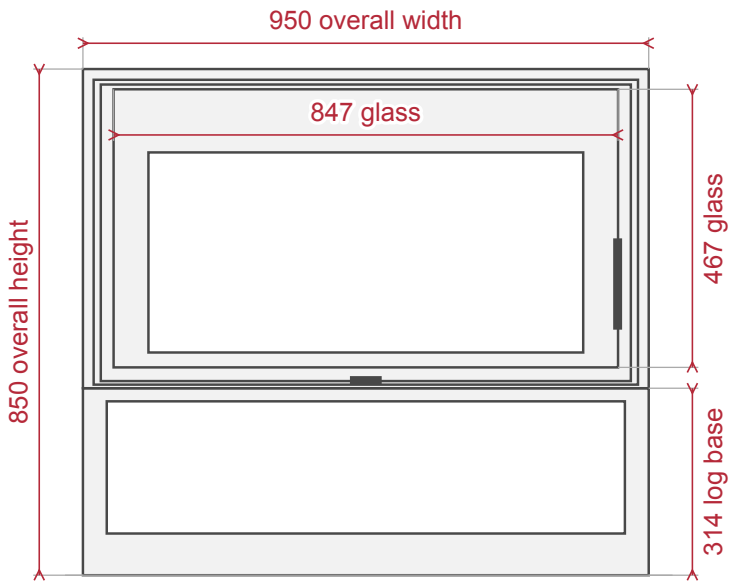

02 SIDE VIEW

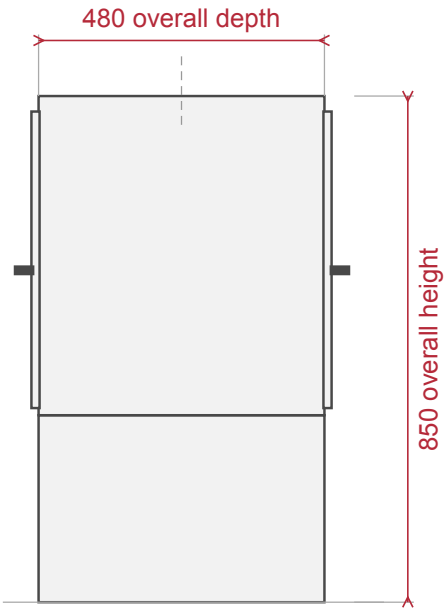

Glass doors at the left and the right.
Dashed: the outlet centre.

03 TOP VIEW

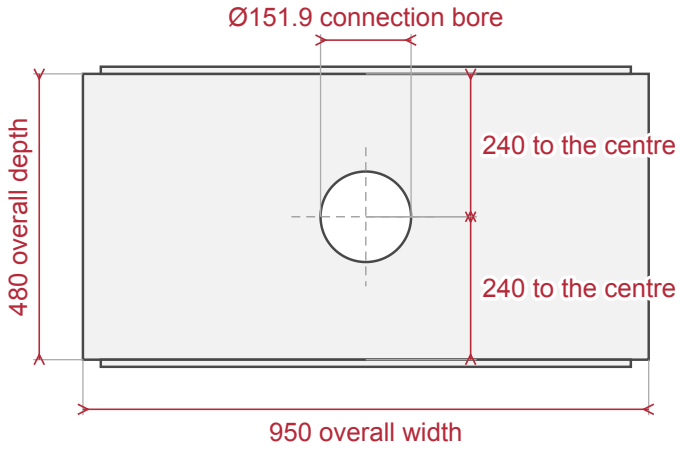

Glass doors at the top and the bottom.
Top flue connection for a Ø150 flue pipe.

04 HEARTH, SIDE VIEW (SMALLER SCALE)

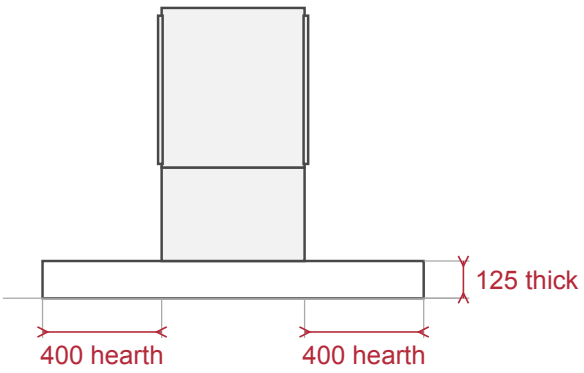

White: the hearth, at both glass doors.

BRAAI CULTURE

ALL SIZES IN MILLIMETRES

FLAMM 950 Double Sided on Log Base

05 COMBUSTIBLE WALLS, TOP VIEW (SMALLER SCALE)

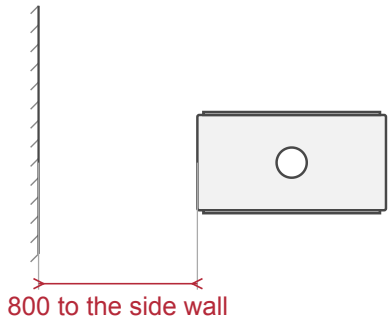

Glass doors at the top and the bottom.

06 CEILING AND FURNISHINGS (SMALLER SCALE)

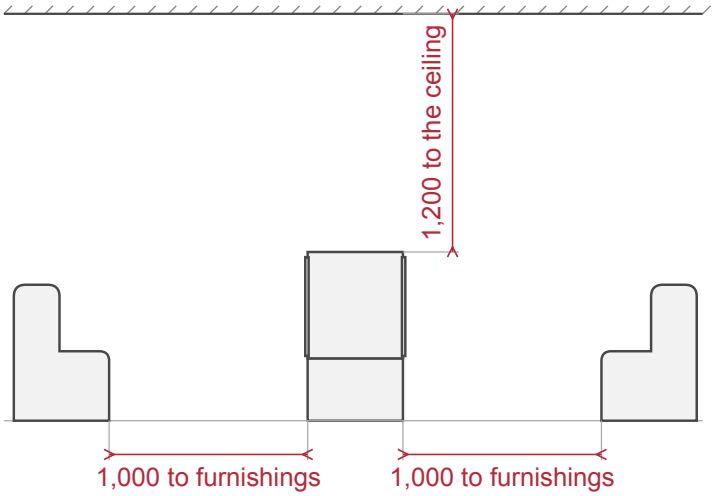

Side view. Glass doors at the left and the right.

PLANNING NOTES

These are product sizes, not the full space needed for safe use. Keep both loading doors accessible.
Have an accredited installer confirm the floor support, the combustion air and the clearances.
Use a non-combustible hearth. The fireplace weighs 156 kg: check that the floor can support it and the flue.
Included: the log base, two glass doors with handles, an ash pan. Not included: flue kits, the hearth, installation.
Flue kits are quoted to suit the building. Use a dedicated flue route, not one shared with another appliance.
Heat output: 13 kW nominal, 16 kW maximum. Efficiency: 80 %. The firebox is fully welded 5 mm steel.
Burn dry, seasoned hardwood. Logs about 350 long or less; split logs thicker than 80.
Register the fireplace within 30 days of purchase for the five-year limited main-body warranty.