Chad-O-Chef Qube Braai with Canvas Cover

Freestanding wood braai: 600 square cooking surface with a centre fire basket, on wheels

01 FRONT VIEW, SIDE TABLES UP

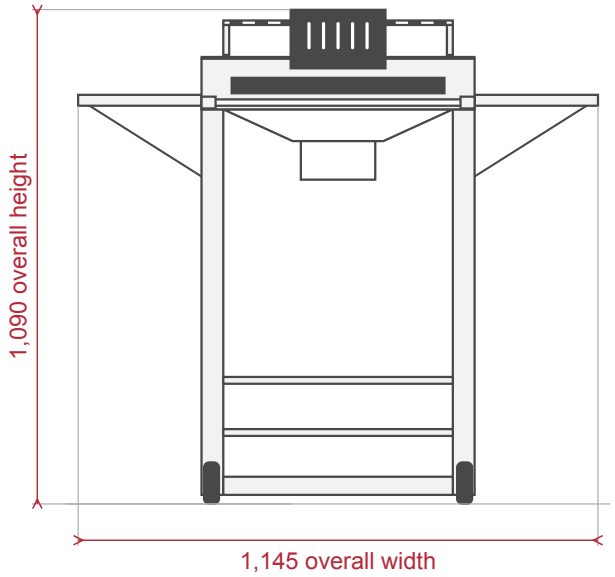

Two wheels and foldable side tables.

02 TOP VIEW, SIDE TABLES UP

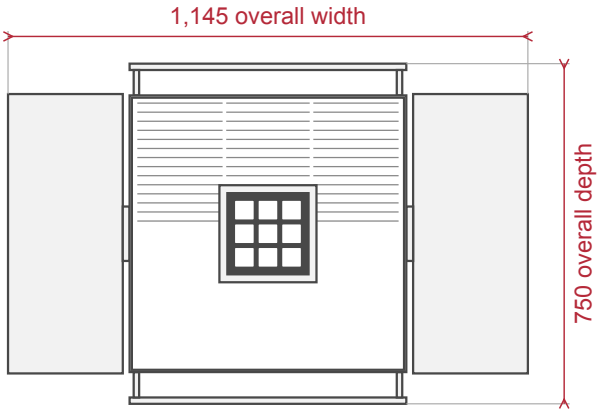

Front at the bottom.

03 COOKING SURFACE (LARGER SCALE)

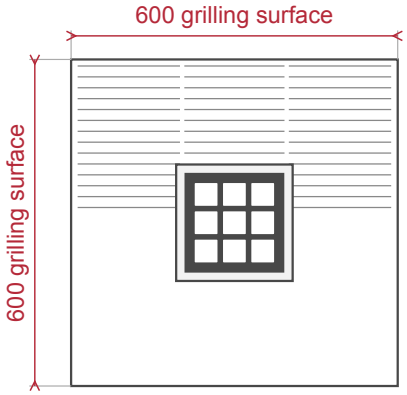

Open braai grid and flat-top cooking grid.
Centre opening: add wood while you cook.

04 COOKING SURFACE, SECTION (LARGER SCALE)

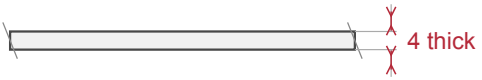

The cooking surface is 4 thick.

PLANNING NOTES

These are product sizes. The 1,145 width is with the side tables raised.
Ask us for the width with the side tables folded down before you plan the space.
Place it on a level surface.
With its standard parts the Qube can grill, sear or slow cook.
Included: a warmer tray and a scraper.
The rotisserie kit is sold separately.
Weight: 60 kg.
You get the Qube braai with its canvas cover. The cover is not drawn here.