Chad-O-Chef Flame FireBlade Firepit Burner (Gas Burning)

Outdoor gas fire pit: flame-shaped steel blades around an LPG burner, logs or fire glass

01 FRONT VIEW

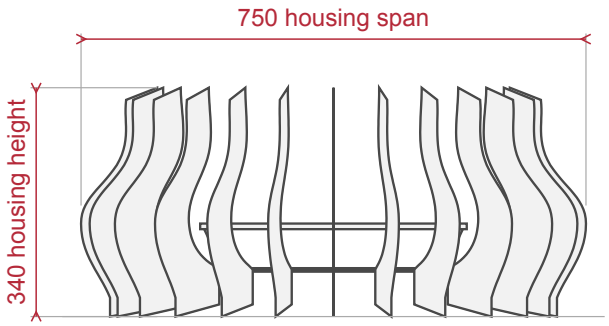

02 TOP VIEW

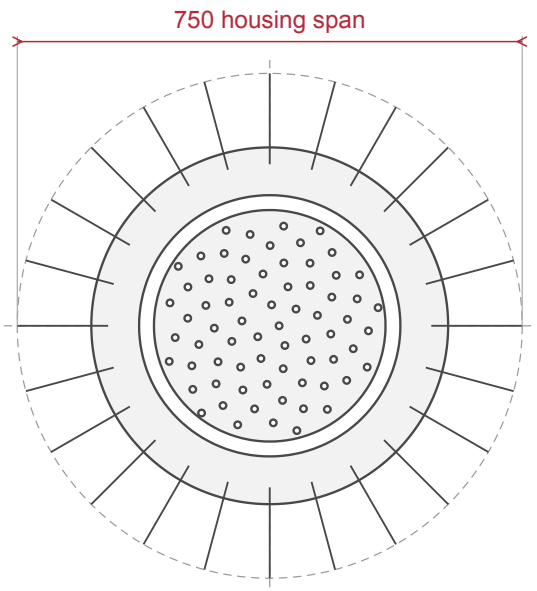

03 CLEARANCES FROM THE SIDE (SMALLER SCALE)

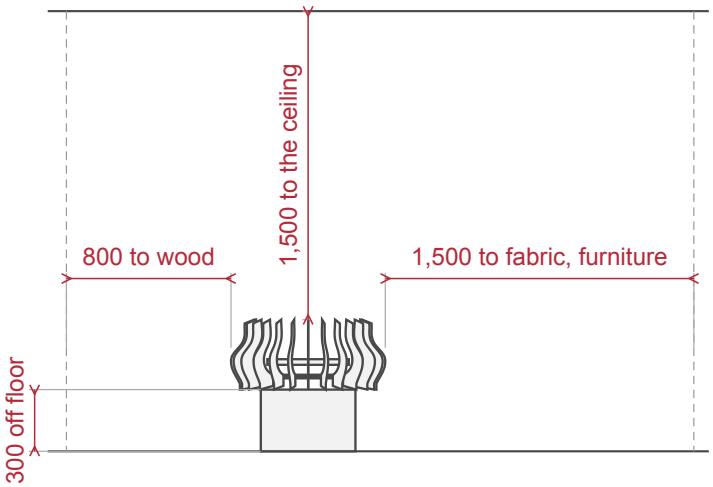

04 CLEARANCES FROM ABOVE (SMALLER SCALE)

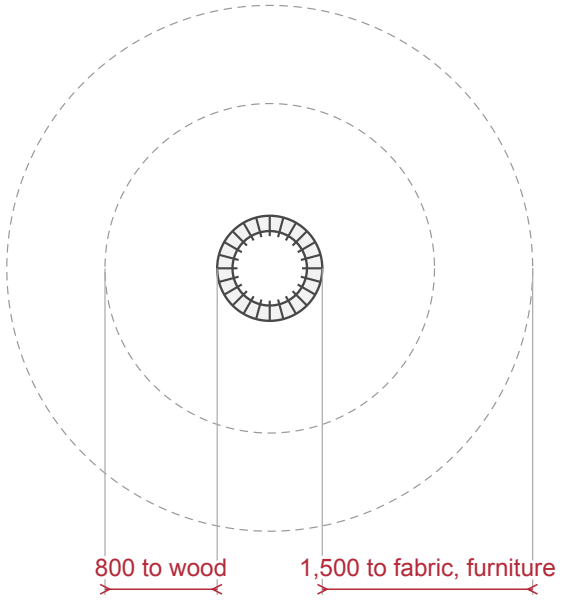

PLANNING NOTES

The two product sizes are for the blade housing. Ask us for the full depth and weight with the burner fitted.
For outdoor use only. A registered SAQCC Gas installer must fit it.
Set it on a masonry or steel platform, with a permanent free-air opening of at least 100 mm² under it.
Keep wood 800 away and fabric or furniture 1,500 away on every side, and ceilings or timbers 1,500 above.
Gas: LPG at 2.8 kPa, regulator of at least 4 kg/hr, 8 mm compression inlet. A natural-gas model is separate.
With logs, leave at least 50 between parallel logs. The housing steel is 2.5 to 3 thick.