ALL SIZES IN MILLIMETRES

WIKING S4 5-7 kW Slow Combustion Fireplace

Cast-iron closed-combustion freestanding fireplace

01 FRONT VIEW

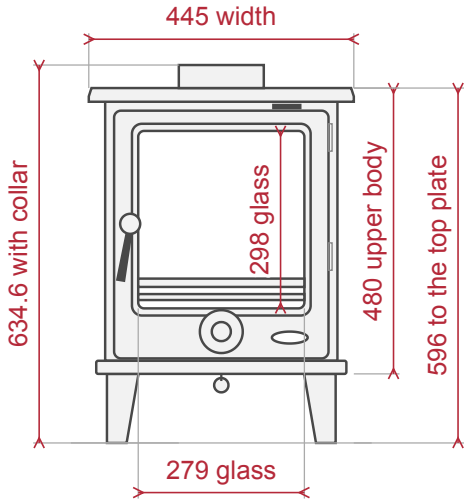

02 SIDE VIEW

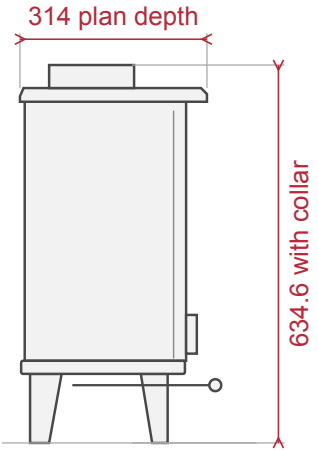

Front at the right. The door handle and the rod stand out past this depth.

03 TOP VIEW

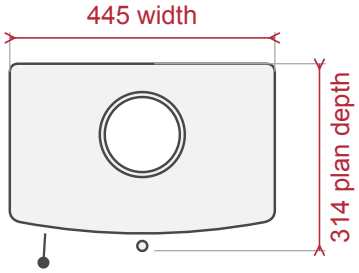

Back at the top. Front at the bottom.

04 FLUE OUTLET (LARGER SCALE)

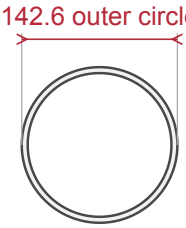

Flue pipe: 125 nominal.
Inside the flue: 127 to 132.
Top or rear connection.
No adaptor: use 6 mm rope.

05 FLOOR PROTECTOR (SMALLER SCALE)

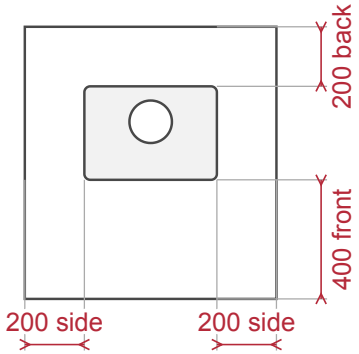

Plan. Front at the bottom. White: the floor protector, at its smallest size.

06 IN A RECESS (SMALLER SCALE)

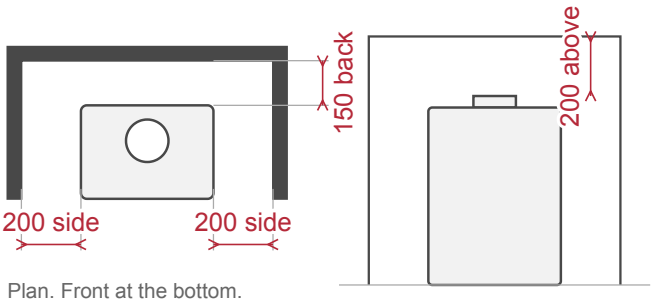

Plan. Front at the bottom.

Front view.

BRAAI CULTURE

WIKING S4 5-7 kW Slow Combustion Fireplace

07 CLEARANCES FROM ABOVE (SMALLER SCALE)

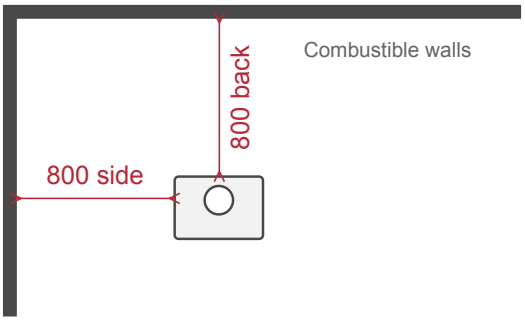

Plan. Back at the top. These are the smallest distances.

08 CLEARANCES FROM THE SIDE (SMALLER SCALE)

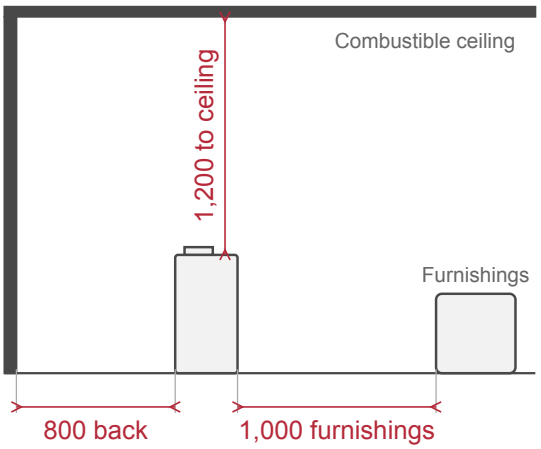

Side view. Front at the right.

PLANNING NOTES

The 634.6 height includes the collar on top. The 596 height stops at the top plate.
The 480 runs from under the plinth to the top plate.
The 314 depth runs from the back to the curved front. The door handle and the rod stand out past it.
Heat output: 5 kW nominal, 7 kW maximum.
Weight 64 kg: check that the floor can carry it.
Included: the fixed grid, the ashpan, the door and its handle.
Flue kits and pipes, and the 125/185 fixed high-wind cowl, are separate accessories.
Use dry wood or A-grade anthracite, no other fuels. Use seasoned wood with a moisture content below 20%.
There is no outside air connection.