ALL SIZES IN MILLIMETRES

FLAMM CUTE 1200

Freestanding wood fireplace: closed combustion, the firebox turns on a long log stand

01 FRONT VIEW

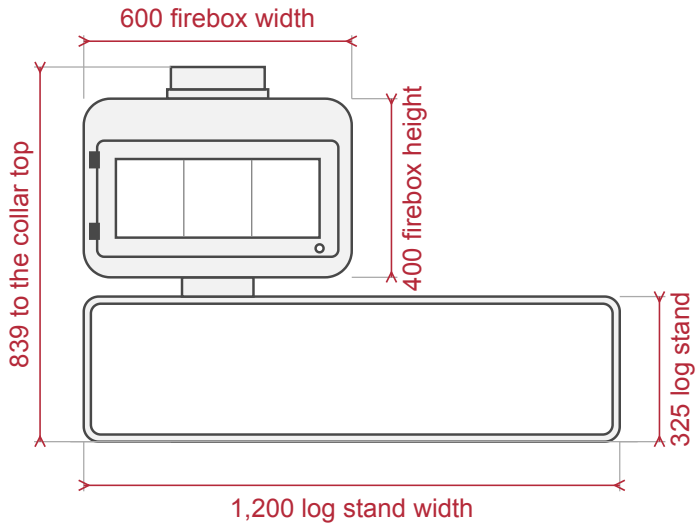

02 SIDE VIEW

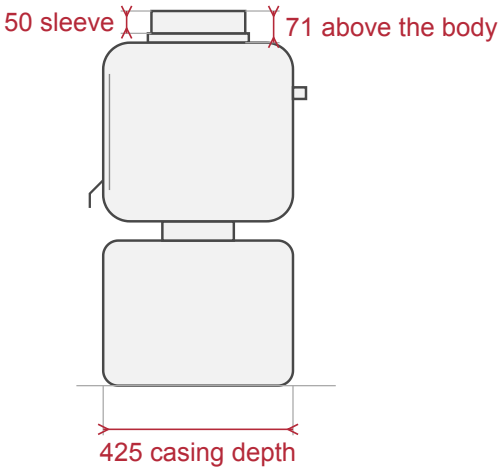

Front at the left. Back at the right.

03 TOP VIEW

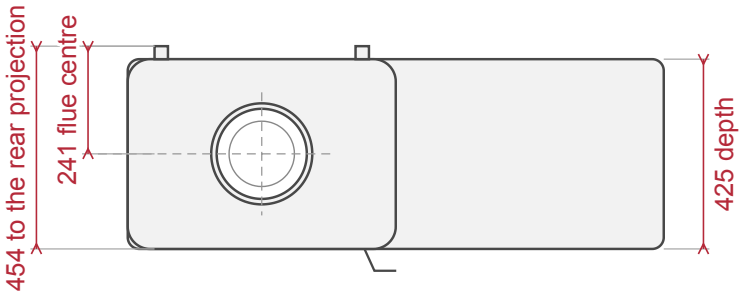

Back at the top. Front at the bottom.
The handle stands out beyond the 454.

04 FLUE OUTLET (LARGER SCALE)

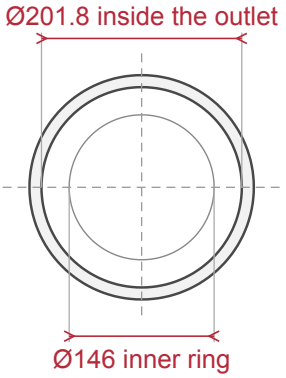

For a nominal 200 flue pipe.
Outlet seen from above.

BRAAI CULTURE

ALL SIZES IN MILLIMETRES

FLAMM CUTE 1200

05 COMBUSTIBLE WALLS, TOP VIEW (SMALLER SCALE)

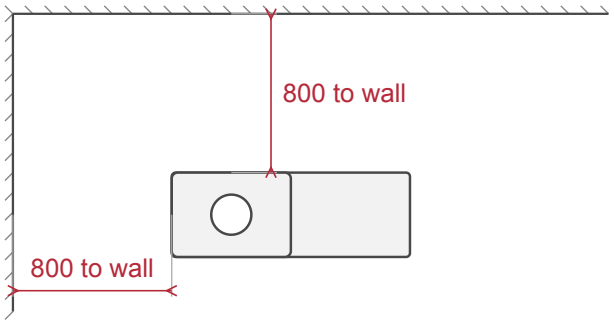

Back at the top. Front at the bottom.

06 FLOOR PROTECTOR, TOP VIEW (SMALLER SCALE)

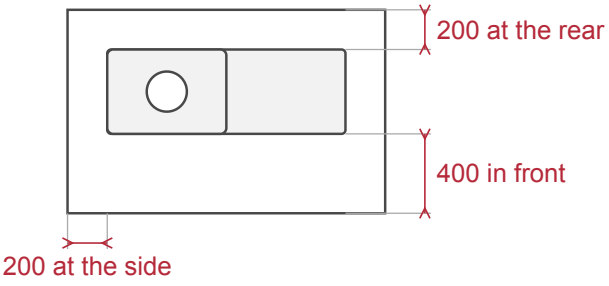

Front at the bottom.

07 CEILING AND FURNISHINGS (SMALLER SCALE)

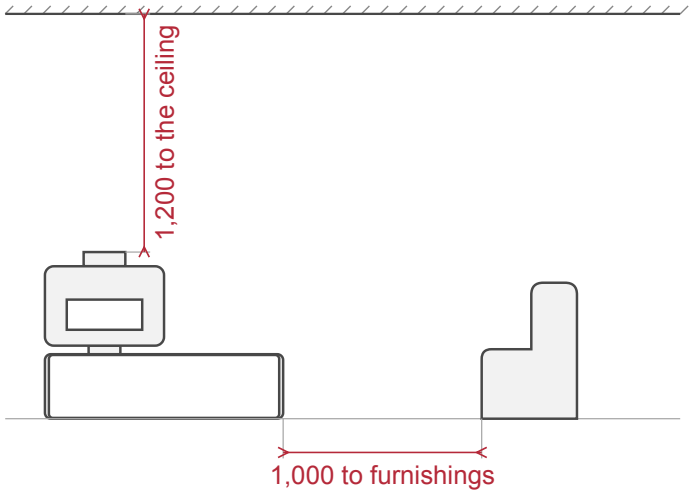

PLANNING NOTES

These are product sizes. Have an independent installer confirm the hearth, the flue route and the clearances.
The firebox turns on its log stand. Plan its position, the flue and the clearances with your independent installer.
In a suitable recess, leave a free air gap of 200 at the sides and top and 50 at the rear.
That gap is for airflow only and does not replace the 800 to combustible walls.
It has no ash pan.
Chimney flue pipes, accessories and installation are not included. Send us a photo and measurements for a flue quote.