ALL SIZES IN MILLIMETRES

Home Fires Kamp Braai (Stainless Steel)

Folding camp braai with an ember maker and three fold-out work surfaces

01 FOLDED: FRONT VIEW

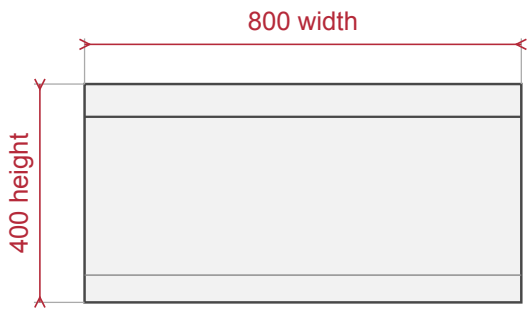

02 FOLDED: SIDE VIEW

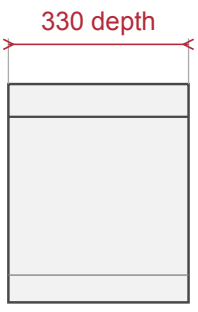

03 OPEN: FRONT VIEW

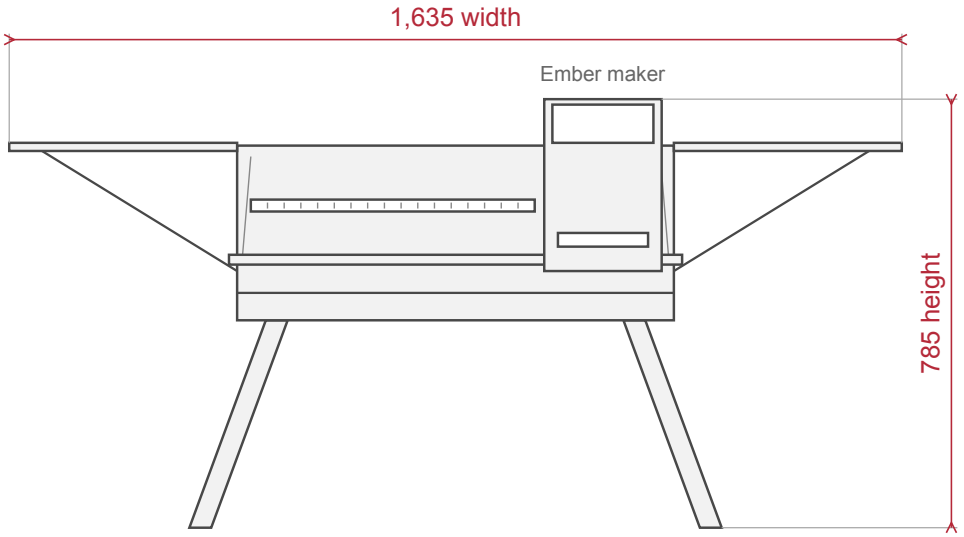

04 OPEN: SIDE VIEW

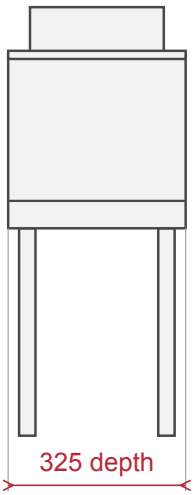

PLANNING NOTES

Three work surfaces fold out: one at each side and one at the front.
The braai grid is sold separately. Ask us for the grid size.
Ask us for the ember maker width if you need it.