ALL SIZES IN MILLIMETRES

FLAMM I1000 on Log Base

Freestanding wood fireplace: closed combustion, wide glass front, long log base below

01 FRONT VIEW

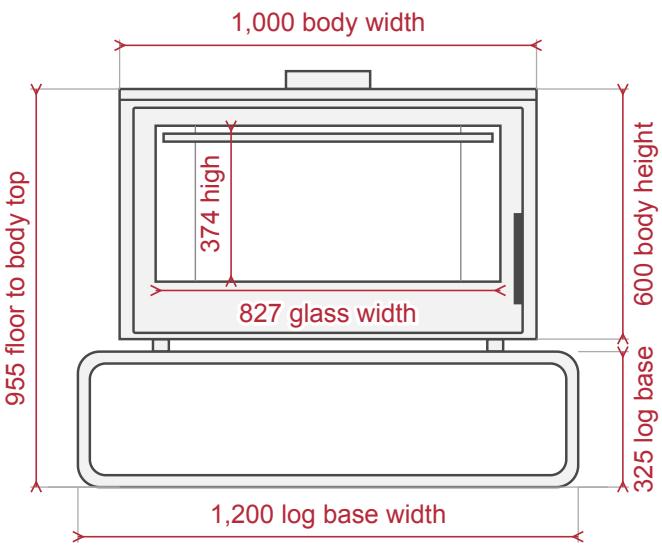

02 SIDE VIEW

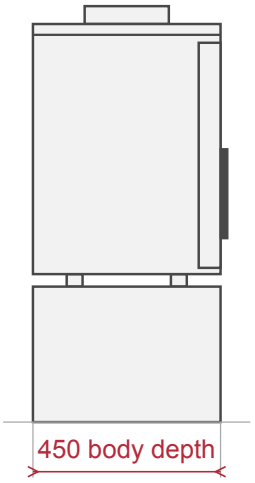

Back at the left. Front at the right.

03 TOP VIEW

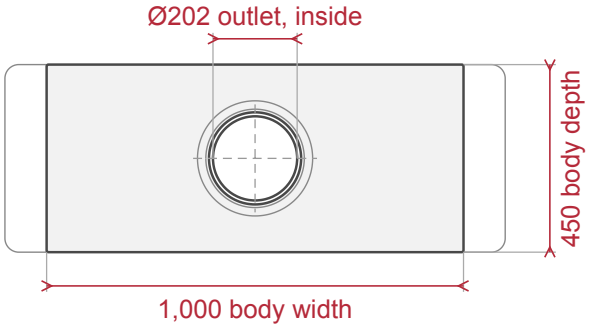

Back at the top. Front at the bottom. Thin line: the log base.
For a nominal Ø200 flue pipe.

04 COMBUSTIBLE WALLS, TOP VIEW (SMALLER SCALE)

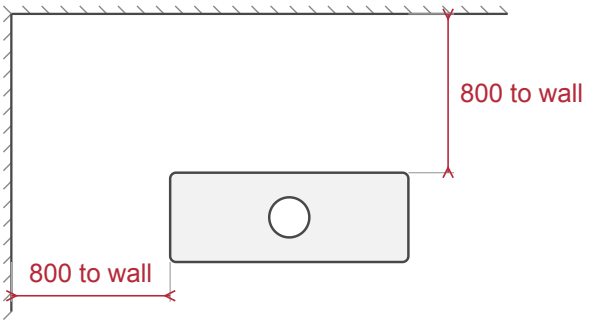

BRAAI CULTURE

ALL SIZES IN MILLIMETRES

FLAMM I1000 on Log Base

05 FLOOR PROTECTOR, TOP VIEW (SMALLER SCALE)

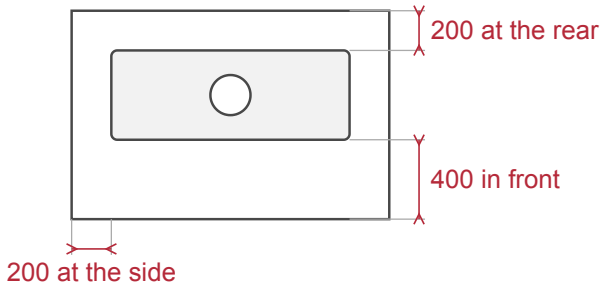

Front at the bottom.

06 CEILING AND FURNISHINGS (SMALLER SCALE)

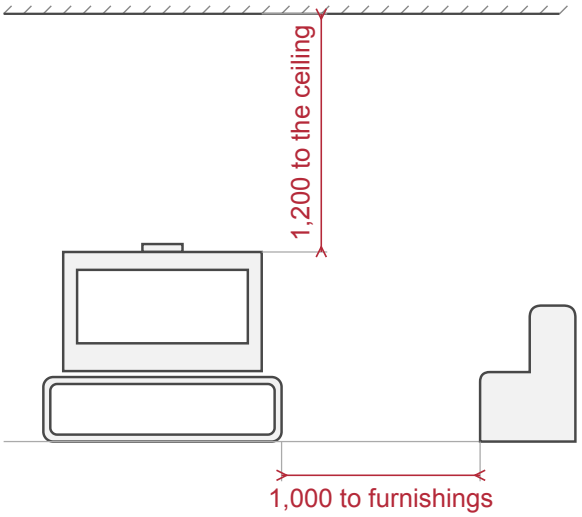

PLANNING NOTES

These are product sizes. Have an independent installer confirm the hearth, the flue route and the clearances.
The 955 ends at the top of the body. The outlet and the flue go above it.
In a suitable recess, leave a free air gap of 200 at the sides and top and 50 at the rear.
That gap is for airflow only and does not replace the 800 to combustible walls.
The fireplace weighs 206 kg, so have your installer check that the floor can carry it.
Chimney flue pipes, accessories and installation are not included. Send us a photo and measurements for a flue quote.