ALL SIZES IN MILLIMETRES

FLAMM PEN 780 on Log Stand

Freestanding wood fireplace: closed combustion, glass on three sides, log stand below

01 FRONT VIEW

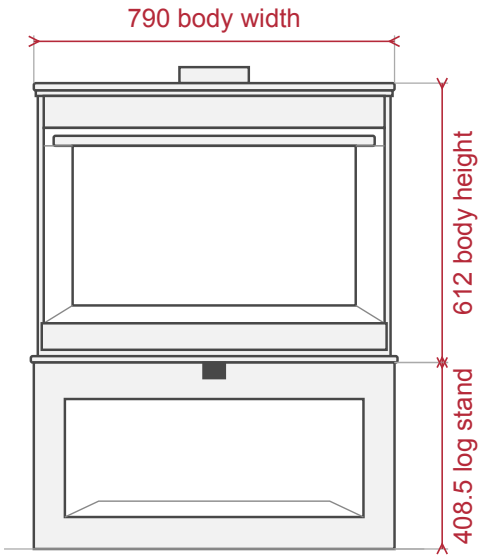

02 SIDE VIEW

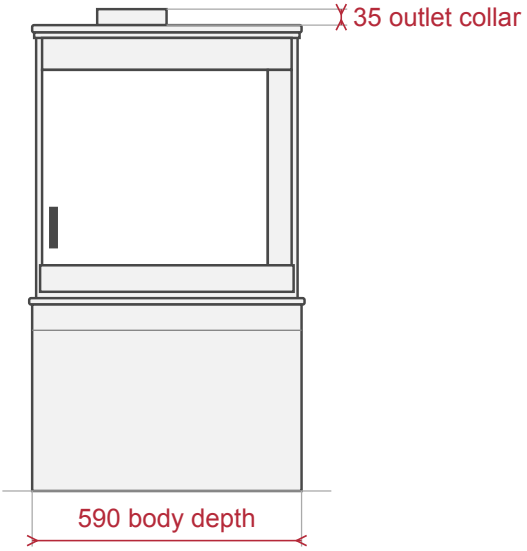

Back at the left. Front at the right.

03 TOP VIEW

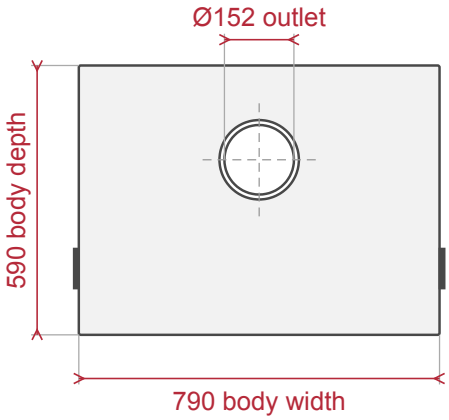

Back at the top. Front at the bottom.

04 COMBUSTIBLE WALLS, TOP VIEW (SMALLER SCALE)

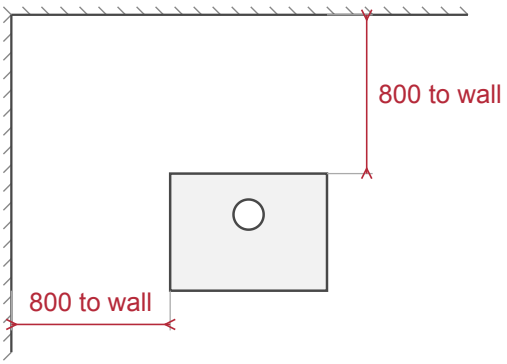

BRAAI CULTURE

ALL SIZES IN MILLIMETRES

FLAMM PEN 780 on Log Stand

05 FLOOR PROTECTOR, TOP VIEW (SMALLER SCALE)

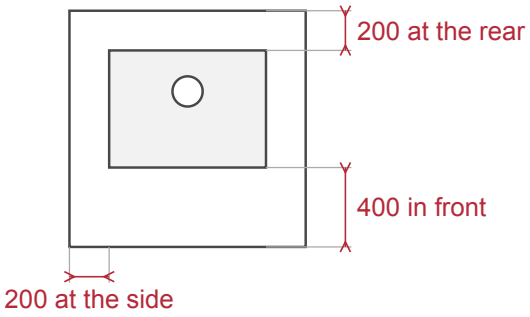

Front at the bottom.

06 CEILING AND FURNISHINGS (SMALLER SCALE)

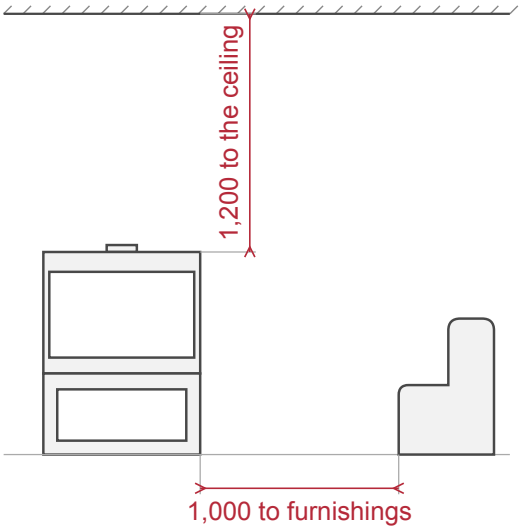

PLANNING NOTES

These are product sizes. Have an independent installer confirm the hearth, the flue route and the clearances.
Ask us to confirm the overall height before a tight fit.
The outlet takes a nominal Ø150 flue pipe. Your installer confirms the exact fit on site.
In a suitable recess, leave a free air gap of 200 at the sides and top and 50 at the rear.
That gap is for airflow only and does not replace the 800 to combustible walls.
The fireplace weighs 170 kg, so have your installer check that the floor can carry it.
Chimney flue pipes, accessories and installation are not included. Send us a photo and measurements for a flue quote.