ALL SIZES IN MILLIMETRES

WIKING ME04 Slow Combustion Fireplace

Cast-iron stove for dry wood or anthracite, with twin glass doors

01 FRONT VIEW

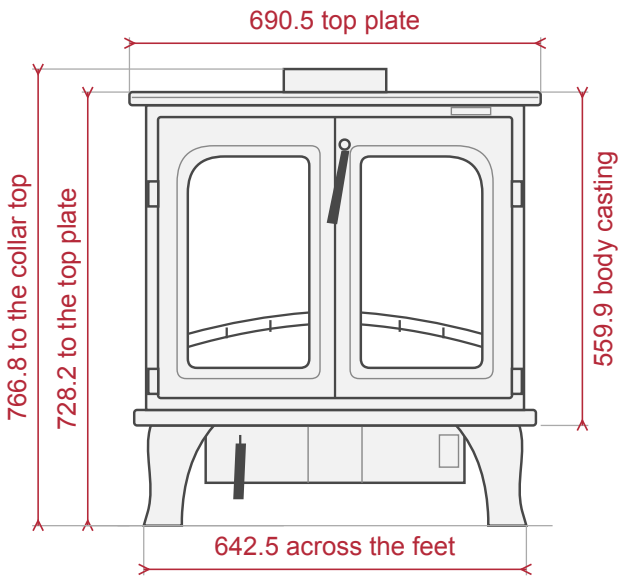

02 SIDE VIEW

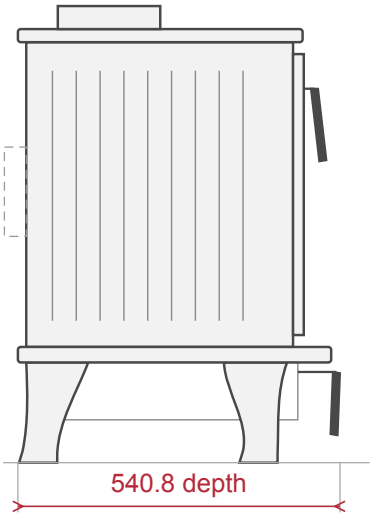

Back at the left. Front at the right.
The flue connects on top or at the rear (dashed).

03 TOP VIEW

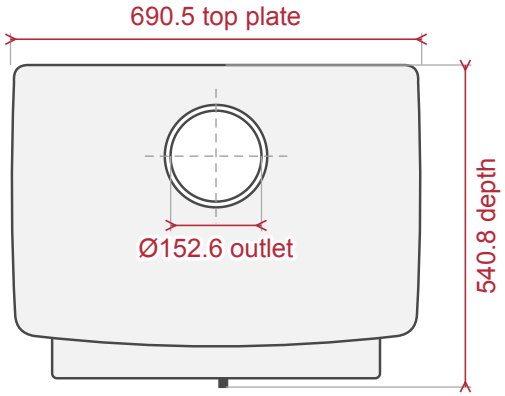

Back at the top. Front at the bottom.
For a nominal 150 flue pipe.

04 COMBUSTIBLE WALLS, TOP VIEW (SMALLER SCALE)

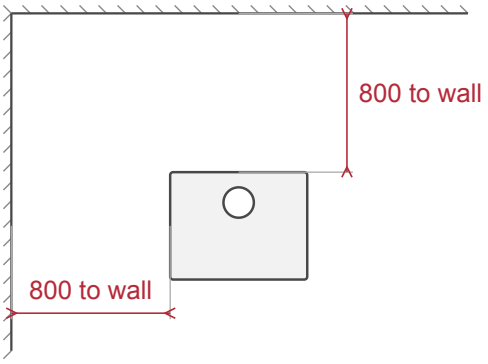

BRAAI CULTURE

WIKING ME04 Slow Combustion Fireplace

05 HEARTH, SIDE VIEW (SMALLER SCALE)

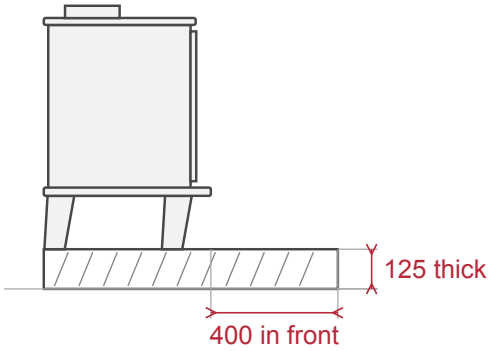

Front at the right.

06 CEILING AND FURNISHINGS (SMALLER SCALE)

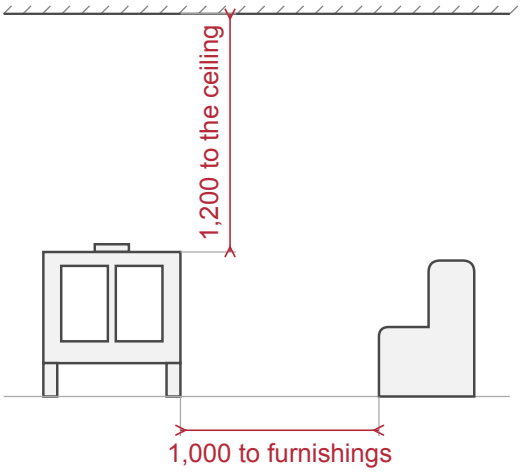

PLANNING NOTES

These are product sizes. Have an independent installer check the hearth, the clearances and the floor.
The socket inside diameter is 152 to 157. Your installer chooses the outlet and plans the flue route.
The constructional hearth must be solid, non-combustible and at least 125 thick, finishes included.
Where a firewall is needed, it must be at least 100 thick.
In a recess only, leave permanent free air of 200 at the sides, 200 above and 150 behind.
The net weight is 177 kg. Have your installer check that the floor and the hearth can carry it.
Heat output: 12 kW nominal, 15 kW maximum.
Front glass: two panes of 355 × 204 each.
Flue pipes, accessories and installation are not included. Send us a photo and measurements for a flue quote.