ALL SIZES IN MILLIMETRES

Weber Smoque Pellet Smoker

Wood pellet smoker with a side hopper and a digital controller

01 FRONT VIEW / LID OPEN

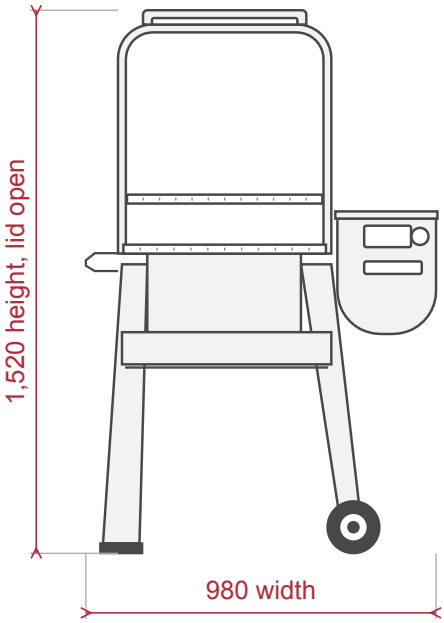

02 SIDE VIEW / LID CLOSED

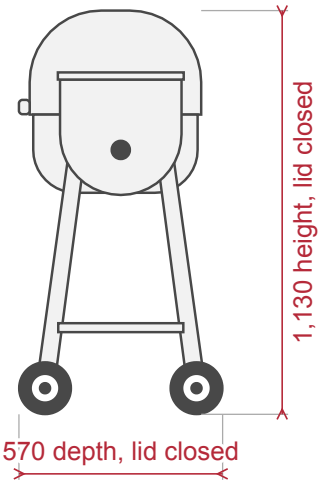

Front at the left.

03 SIDE VIEW / LID OPEN

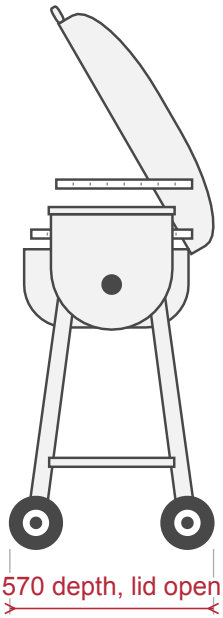

Front at the left. The depth stays the same with the lid open.

04 COOKING AREA (TWO LEVELS)

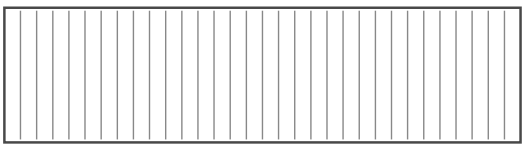

1,348 cm² warming rack

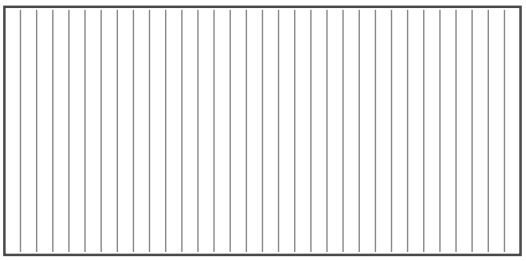

2,484 cm² main grate

3,832 cm² cooking area in total, on two levels.

ALL SIZES IN MILLIMETRES

Weber Smoque Pellet Smoker

05 SPACE AROUND THE BRAAI (PLAN, SMALLER SCALE)

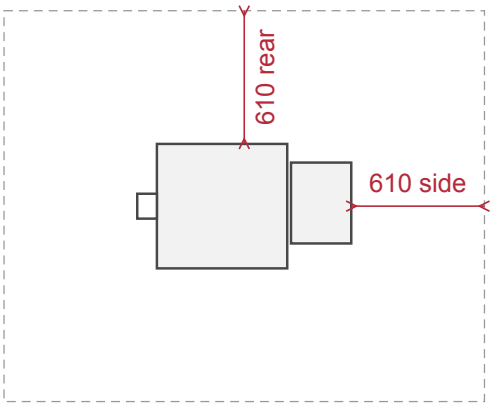

Front

Keep anything that can burn at least 610 away,
on every side and behind the braai.
Nothing that can burn above the braai.
Keep the braai at least 3 m from a pool or pond.

PLANNING NOTES

These are the outside sizes of the assembled braai.
Plan the space with the lid open: it needs room above the braai.