ALL SIZES IN MILLIMETRES

Weber Searwood 600 Pellet

Wood pellet braai: smoke, roast and sear, with a side hopper

01 FRONT VIEW / LID OPEN

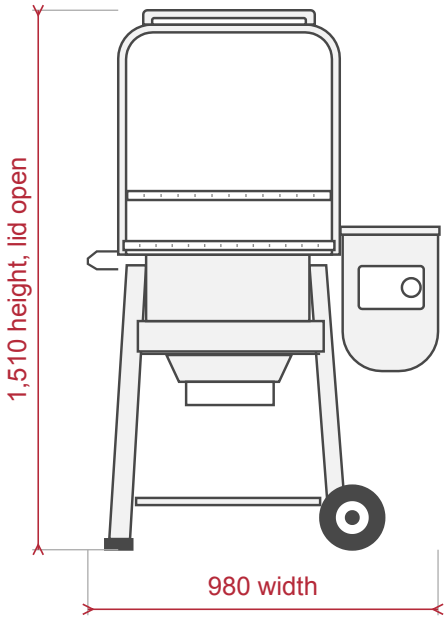

02 SIDE VIEW / LID CLOSED

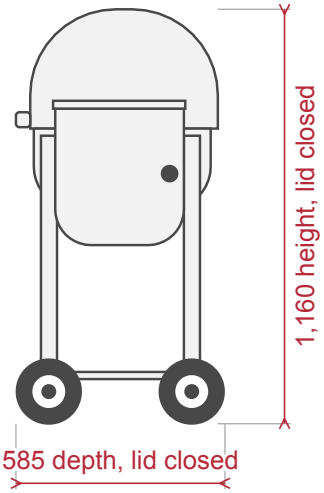

Front at the left.

03 SIDE VIEW / LID OPEN

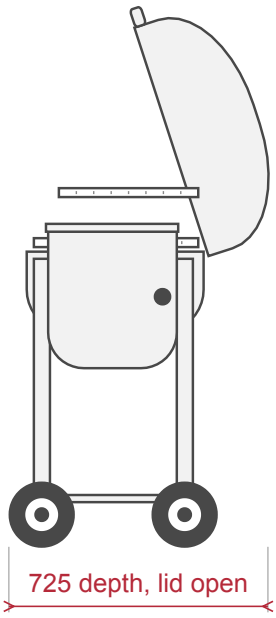

Front at the left. Leave room behind for the lid.

04 COOKING AREA (TWO LEVELS)

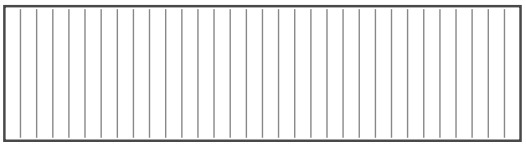

1,470 cm² warming rack

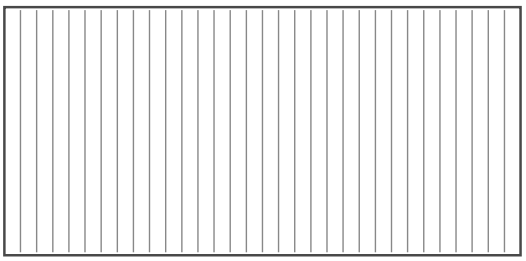

2,710 cm² main grate

4,180 cm² cooking area in total, on two levels.

Weber Searwood 600 Pellet

05 SPACE AROUND THE BRAAI (PLAN, SMALLER SCALE)

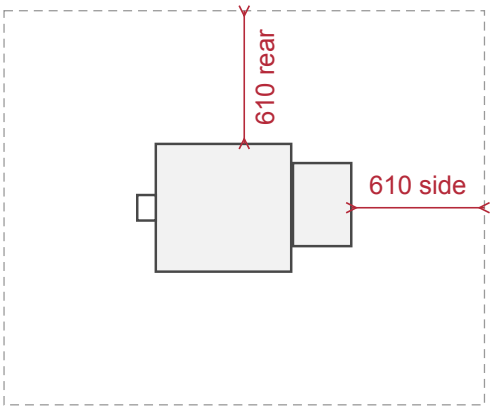

Front

Keep anything that can burn at least 610 away,
on every side and behind the braai.
Keep the braai at least 3 m from a pool or pond.

PLANNING NOTES

These are the outside sizes of the assembled braai.
Plan the space with the lid open: it needs room above and behind.