ALL SIZES IN MILLIMETRES

Kamado Joe Classic Joe I

Ceramic kamado braai on a cart with side shelves

01 FRONT VIEW / LID CLOSED

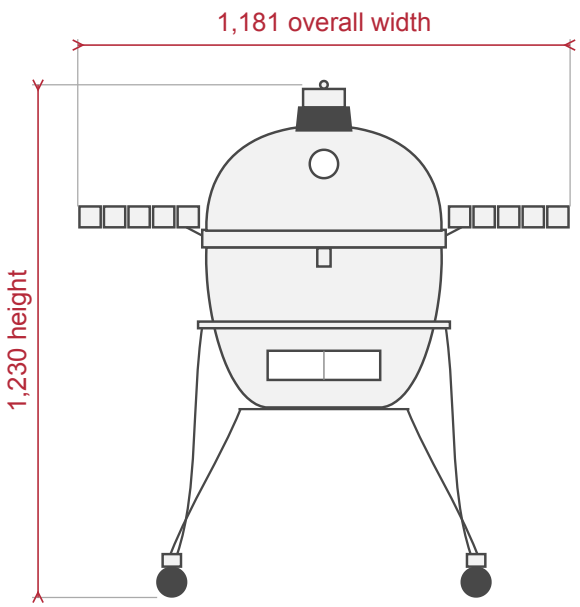

02 SIDE VIEW / LID OPEN

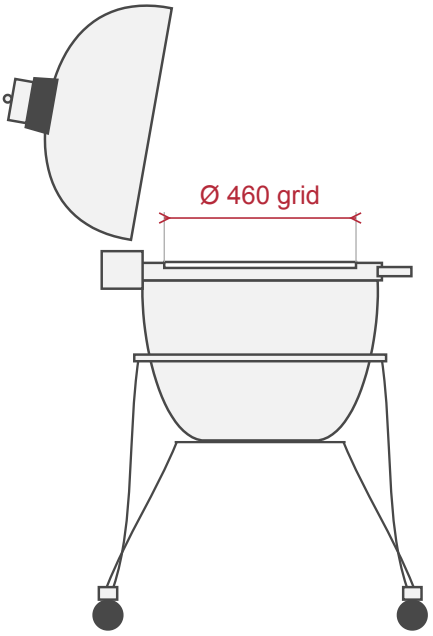

Front at the right.

BRAAI CULTURE

ALL SIZES IN MILLIMETRES

Kamado Joe Classic Joe I

03 TOP VIEW

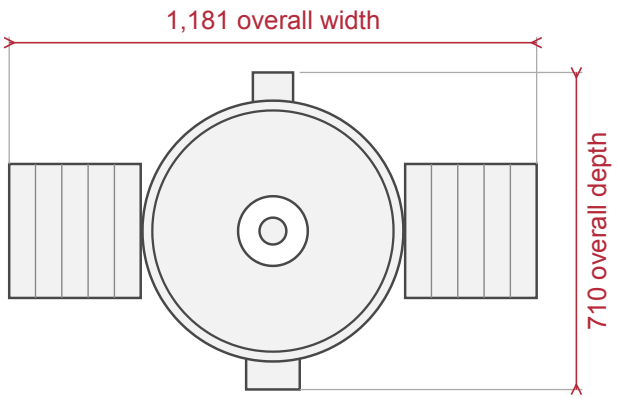

FRONT

04 COOKING GRID

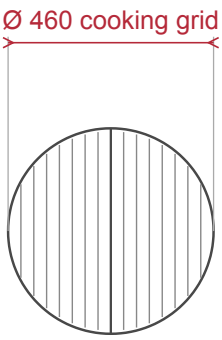

Two-tier Divide & Conquer cooking system.

05 SPACE AROUND THE GRILL (TOP VIEW)

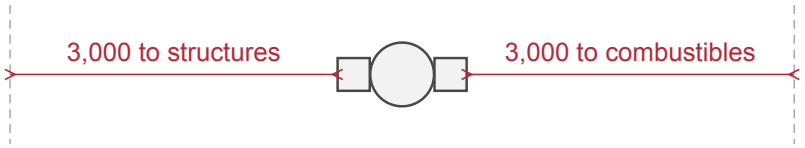

Keep this space clear on every side, also at the front and the rear.

PLANNING NOTES

Use it outdoors only, on a level and stable surface that cannot burn.
Never use it under a roof, a cover or any other overhead structure.
The lid opens to the rear: leave room behind the grill for the open lid.
The overall width is with the two side shelves up.