ALL SIZES IN MILLIMETRES

Jetmaster BLAZE on Pedestal

Freestanding wood stove: closed slow combustion, a round body on a pedestal, with a wide glass window

01 FRONT VIEW

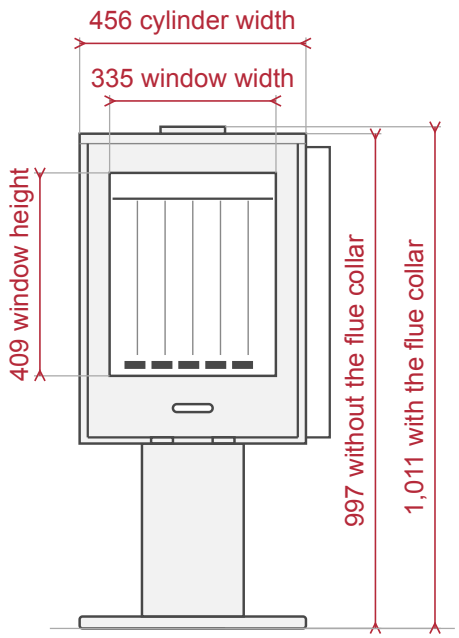

02 SIDE VIEW

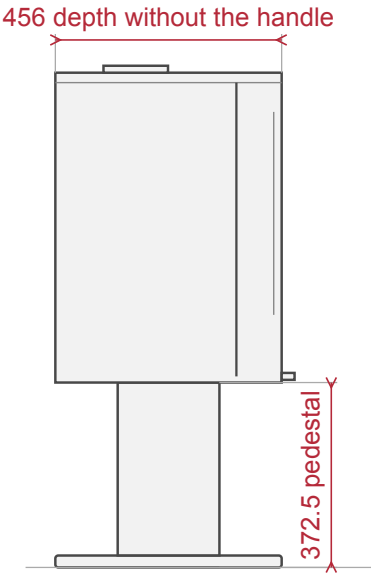

Front at the right.
The 372.5 runs from the floor to the underside of the body.

03 REAR VIEW

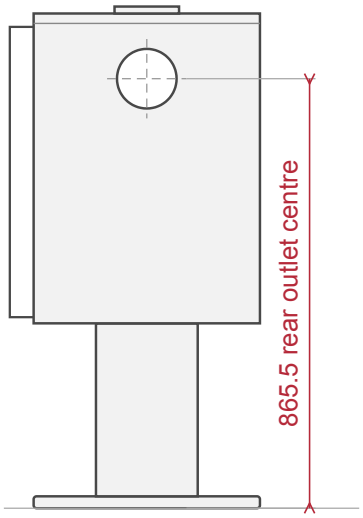

Seen from the back. The flue connects on top or at the rear.

04 TOP VIEW

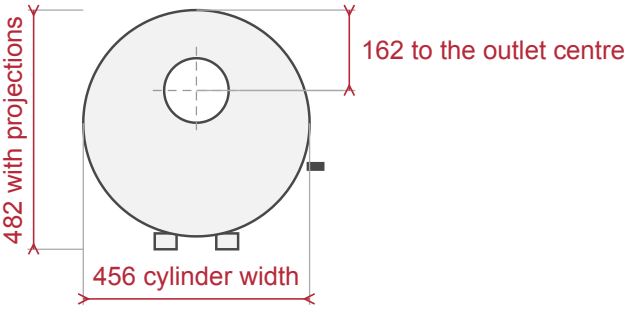

Front at the bottom. The 162 is from the back of the body.

ALL SIZES IN MILLIMETRES

Jetmaster BLAZE on Pedestal

05 FIREBOX, CUT FRONT TO BACK (LARGER SCALE)

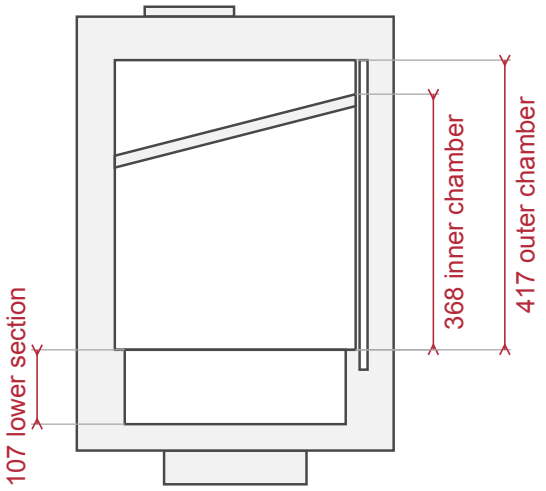

Front at the right, at the glass door.

06 FIREBOX, CUT FROM ABOVE (LARGER SCALE)

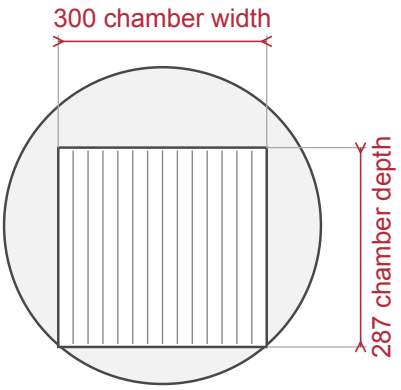

Front at the bottom.

PLANNING NOTES

These are product sizes. Ask us to confirm the safe clearances. Have your installer check the unit and the hearth.
Plan the stove, the hearth and the flue together.
Read the instruction manual on this page before you plan the installation.
Ask us to confirm the flue pipe size before you order. A standard flue section is 1,200 long.
Included: the pedestal base, a grate, an ash pan and handle, a vermiculite plate set, two baffle plates, a flue blanking plate, a flue connector with a fireproof gasket, a fixings kit and a heat-resistant glove.
Flue pipes, a cowl and an escutcheon plate are chosen separately. Installation is not included.