Jetmaster PANORAMA Freestanding

Freestanding wood fireplace: slow combustion, with glass on three sides and four cast-iron legs

01 FRONT VIEW

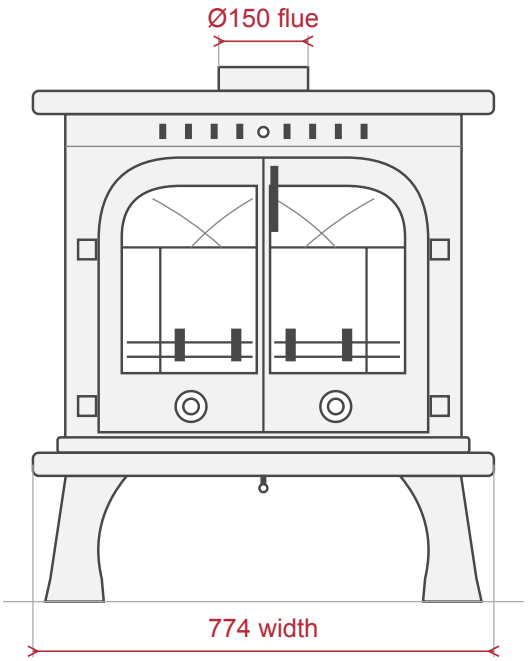

02 SIDE VIEW

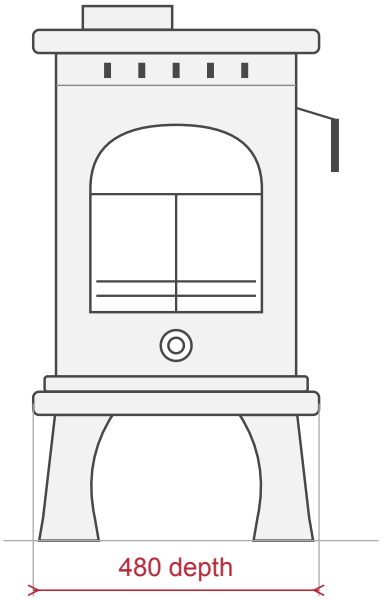

Front at the right. The 480 is without the handle.

03 TOP VIEW

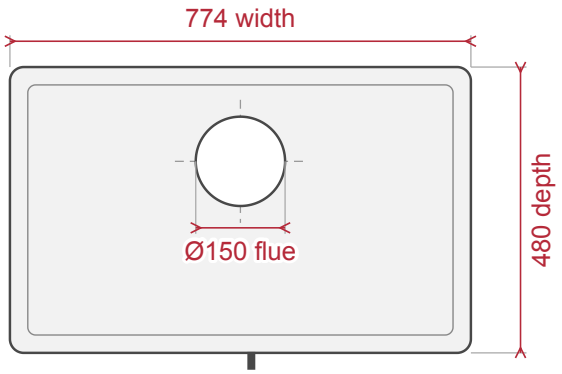

Front at the bottom. Round flue outlet on top.

04 OPTIONAL FLUE (SMALLER SCALE)



Flue pipes, a cowl and an escutcheon plate are chosen separately.
The flue connects on top or at the rear.

PLANNING NOTES

These are product sizes. Ask us to confirm the weight before you plan the floor.
Have your installer confirm the hearth and the clearances from the manual.
Plan the fireplace, the hearth and the flue together.