ALL SIZES IN MILLIMETRES

FLAMM E350 Bio-ethanol Fireplace

Freestanding bio-ethanol fireplace: black steel, glass door and side windows

01 FRONT VIEW

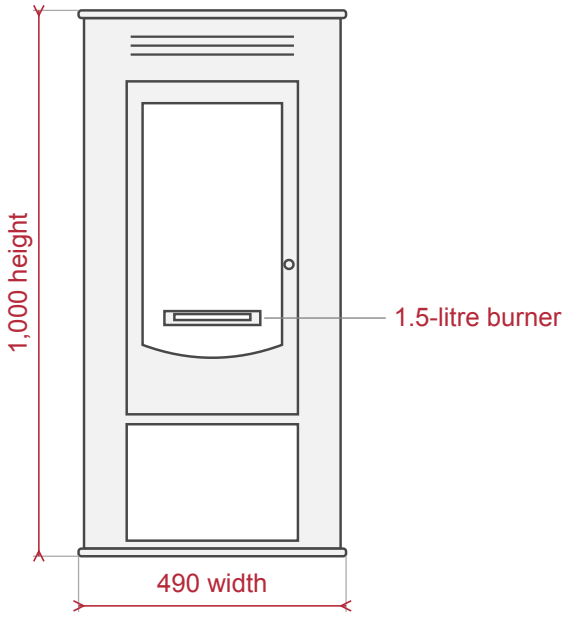

02 SIDE VIEW

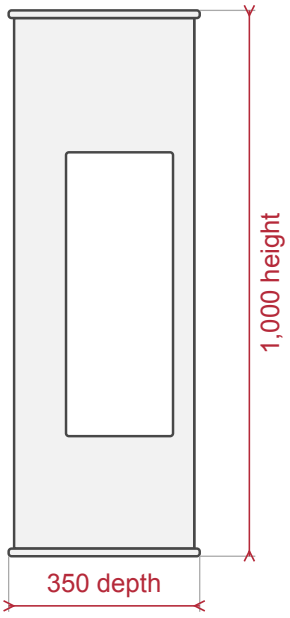

Front at the right.

03 TOP VIEW

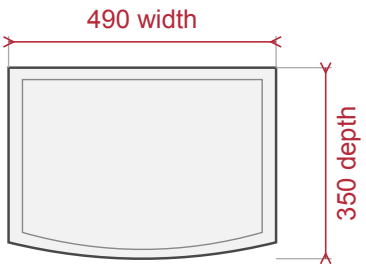

Front at the bottom.

PLANNING NOTES

These are product sizes. Leave room to open the door, reach the burner and keep the clearances.
Confirm the place and the room ventilation with us before you order.
The 1.5-litre burner gives about 2.5 hours of burn time. It varies with use.
The weight is 30 kg.
The burner, the ceramic log set and the flame closer tool are included. The fuel is sold separately.