# Chad-O-Chef 5 Burner Deluxe Entertainer with Rotisserie

Built-in box with a 5 burner Sizzler gas insert and a rotisserie, for natural or forced draught

### 01 NATURAL DRAUGHT, FRONT VIEW, DOORS OPEN

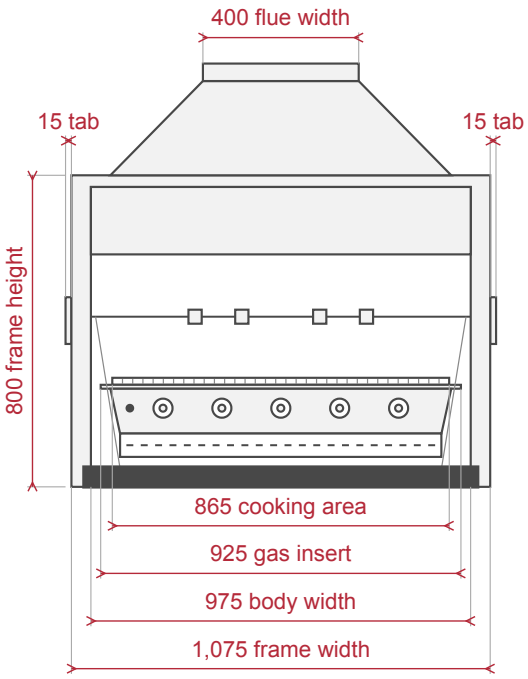


### 02 NATURAL DRAUGHT, SIDE VIEW

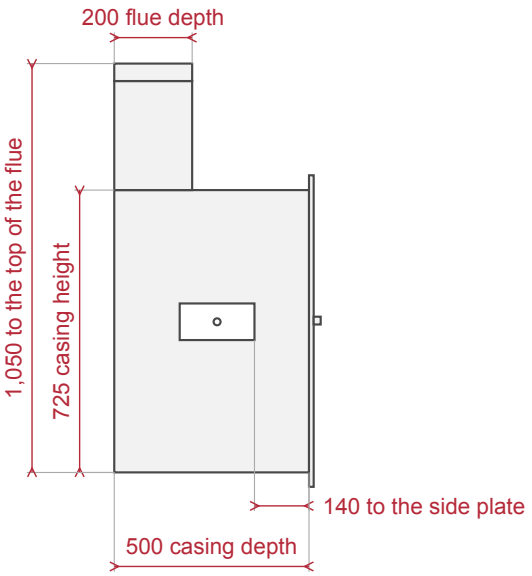


Front at the right.

### 03 FORCED DRAUGHT, FRONT VIEW, DOORS CLOSED

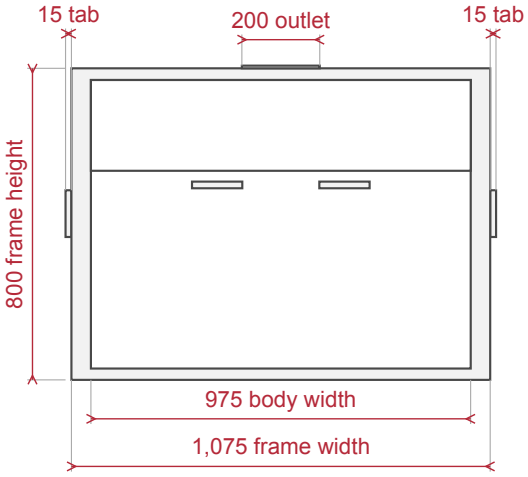


### 04 FORCED DRAUGHT, SIDE VIEW

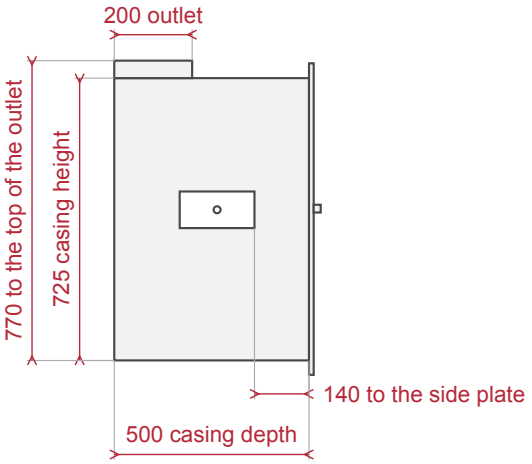


Front at the right.

### 05 GAS INSERT, TOP VIEW

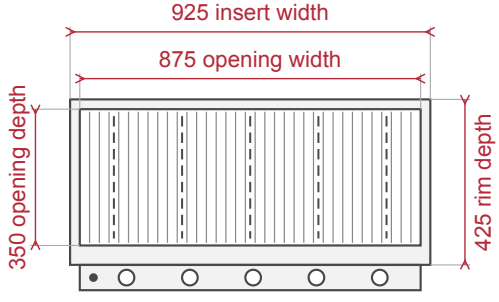


Front at the bottom. Dashed: the 5 burners.
A Sizzler on its own in a recess: allow 5 at each side.

### 06 GAS INSERT, SIDE VIEW

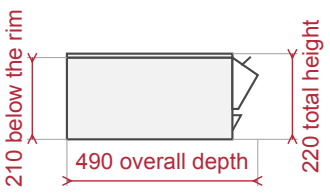


Front at the right.

ALL SIZES IN MILLIMETRES

# Chad-O-Chef 5 Burner Deluxe Entertainer with Rotisserie

### 07 COOKING AREA, TOP VIEW

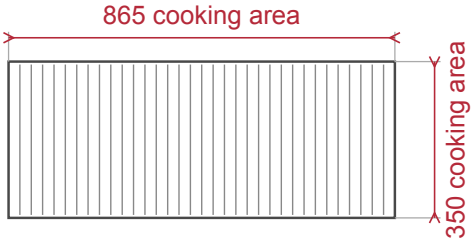


### 08 EXTRACTOR DUCT, FORCED DRAUGHT

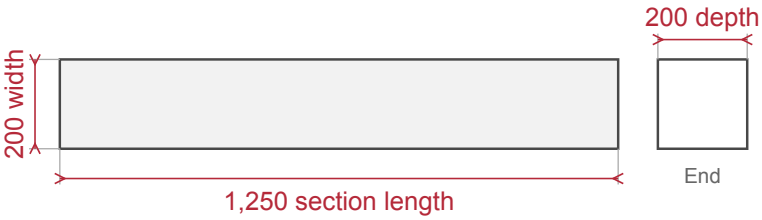


Extra extractor parts, sold separately.

### 09 BUILT-IN EXAMPLE, SIDE VIEW (SMALLER SCALE)

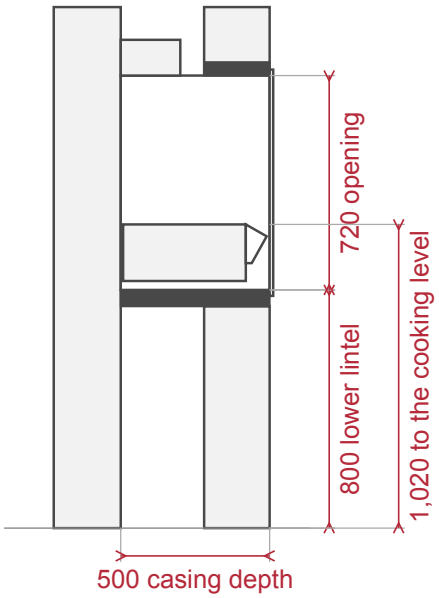


Front at the right.
This is one example of a layout, set in masonry.
It is not a size for an existing opening.
Ask us for the opening size before you build.

### PLANNING NOTES

These are product sizes, not a building-opening size. Ask us for the opening size before you build.
It must be built into masonry on site. Do not fit it into an existing opening.
Natural draught uses a normal chimney, with no assisted extraction.
Forced draught needs extra extractor parts, sold separately.
The box is made for a Sizzler gas insert. It is not for wood or charcoal fires.
For domestic outdoor use, including a patio with at least one open side.
A registered gas installer must install the gas insert. A qualified electrician must do the electrical connections.
One light fitting is included. It needs an electrical connection.
A stainless steel dust cover and drip tray are included.
The doors must stay open while the braai is in use or hot.
The cooking grids are 6 mm stainless steel bar and are dishwasher safe.
The bottom door doubles as a work surface. Ask us for the size with the door open before you plan the space.