ALL SIZES IN MILLIMETRES

Chad-O-Chef 6 Burner Deluxe Entertainer with Rotisserie

Built-in box with a 6 burner Sizzler gas insert and a rotisserie, for natural or forced draught

01 NATURAL DRAUGHT, FRONT VIEW, DOORS OPEN

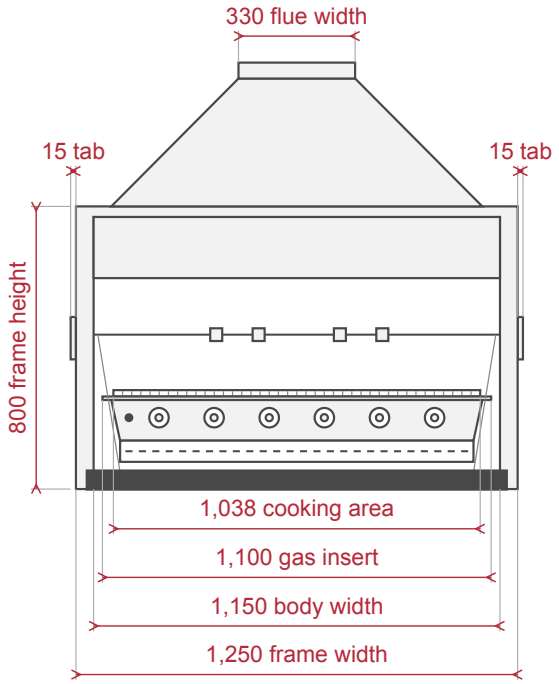

02 NATURAL DRAUGHT, SIDE VIEW

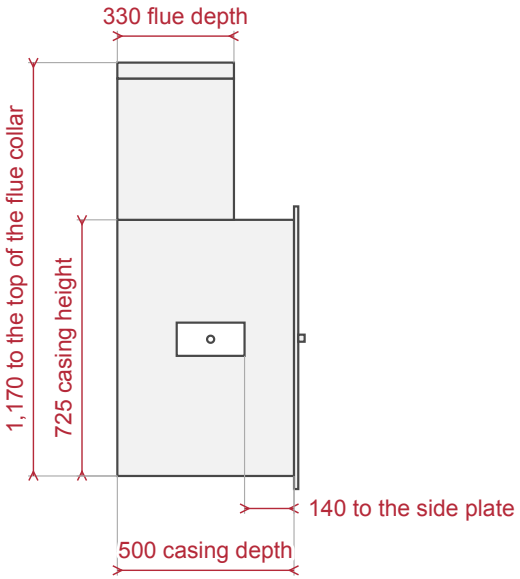

Front at the right.

03 FORCED DRAUGHT, FRONT VIEW, DOORS CLOSED

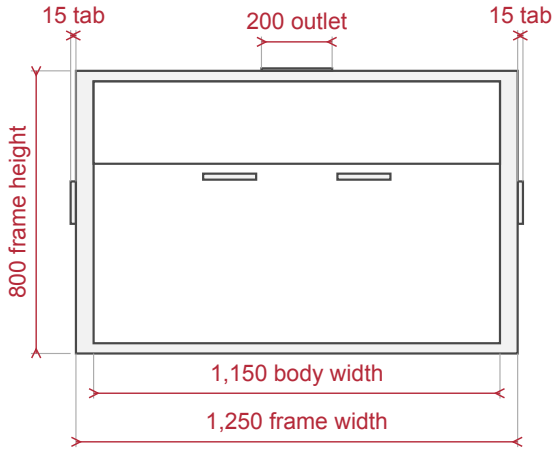

04 FORCED DRAUGHT, SIDE VIEW

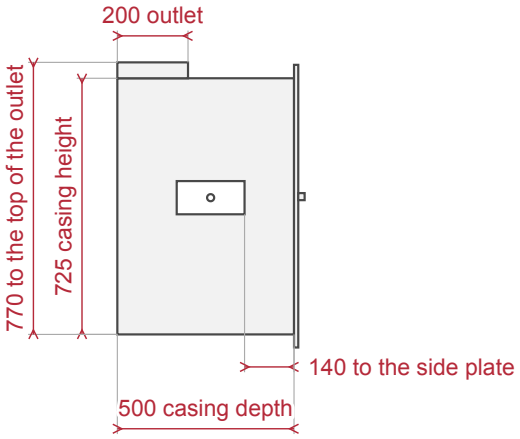

Front at the right.

05 GAS INSERT, TOP VIEW

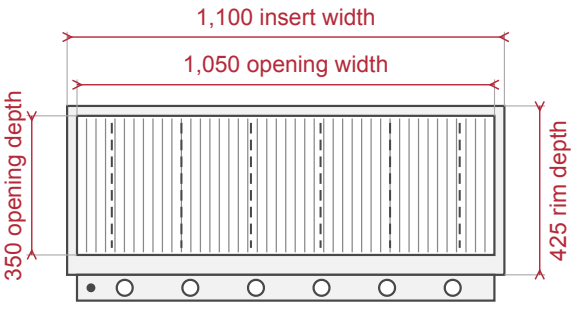

Front at the bottom. Dashed: the 6 burners.
A Sizzler on its own in a recess: allow 5 at each side of the 1,100.

06 GAS INSERT, SIDE VIEW

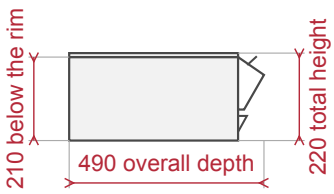

Front at the right.

BRAAI CULTURE

ALL SIZES IN MILLIMETRES

Chad-O-Chef 6 Burner Deluxe Entertainer with Rotisserie

07 COOKING AREA, TOP VIEW



08 EXTRACTOR DUCT, FORCED DRAUGHT

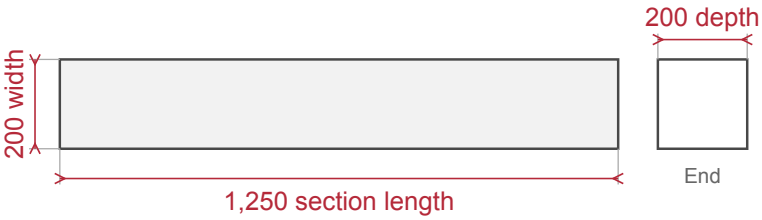

Extra extractor parts, sold separately.

09 BUILT-IN EXAMPLE, SIDE VIEW (SMALLER SCALE)

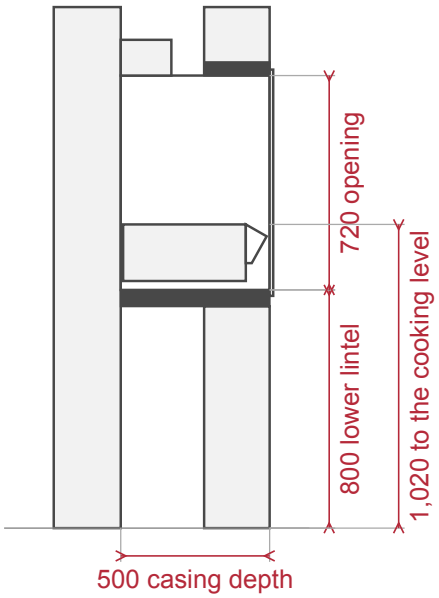

Front at the right.
This is one example of a layout, set in masonry.
It is not a size for an existing opening.
Ask us for the opening size before you build.

PLANNING NOTES

These are product sizes, not a building-opening size. Ask us for the opening size before you build.
It must be built into masonry on site. Do not fit it into an existing opening.
Natural draught uses a normal chimney, with no assisted extraction.
Forced draught needs extra extractor parts, sold separately.
The box is made for a Sizzler gas insert. It is not for wood or charcoal fires.
For domestic outdoor use, including a patio with at least one open side.
A registered gas installer must install the gas insert. A qualified electrician must do the electrical connections.
One light fitting is included. It needs an electrical connection.
The doors must stay open while the braai is in use or hot.
The bottom door doubles as a work surface. Ask us for the size with the door open before you plan the space.