HomeFires Maluti 760 Freestanding Firebox

Freestanding gas fireplace: vent free, solid mild-steel façade on its own base, gas grate

01 FRONT VIEW

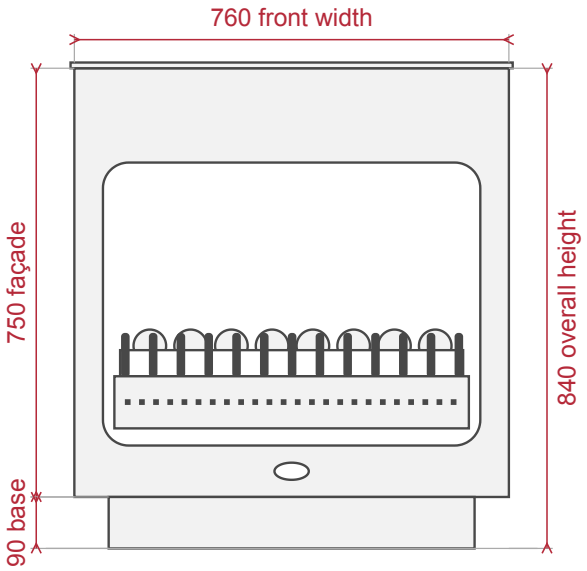

02 SIDE VIEW

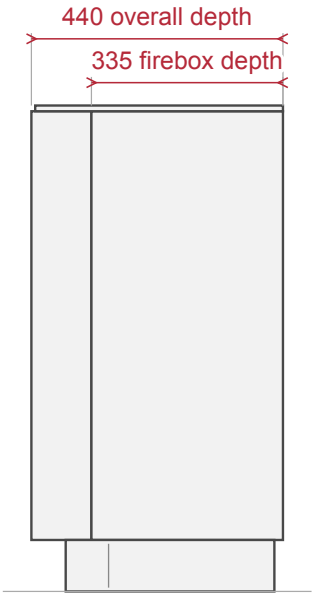

Front at the left. Back at the right.

03 TOP VIEW

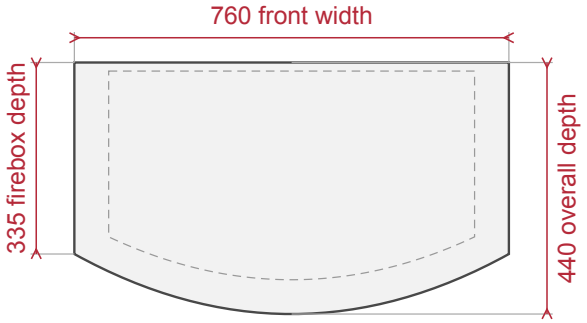

Back at the top. Front at the bottom.
The dashed line is the base below.

04 BASE FLOOR PLAN

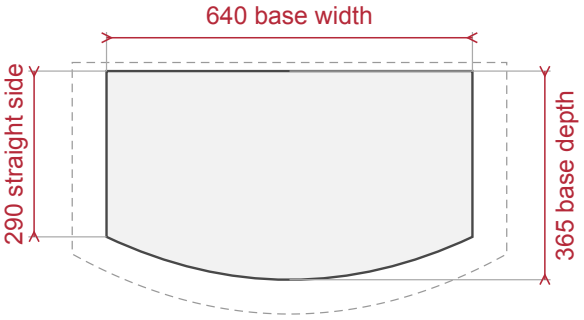

The dashed line is the casing above.
Front at the bottom.

PLANNING NOTES

These are product sizes. The complete unit is 760 wide, 440 deep and 840 high.
The 750 façade and the 90 base give the 840 overall height.
Allow the 440 overall depth. The 335 firebox depth does not include the curved front.
It is vent free: it needs no flue.
Confirm the room, gas supply, ventilation and required clear space for the actual installation.
Included: the Maluti 760 firebox with its solid mild-steel façade, and the base.
Also included: the gas grate for the selected configuration.
This is the solid mild-steel façade. Other finishes and side constructions need their own selection.
Guarantee: 15 years on the firebox, 2 years on the gas grate.