ALL SIZES IN MILLIMETRES

Jetmaster Pro Universal 600 with Basket Grate and Pan

Built-in open fireplace for wood or charcoal

01 FRONT VIEW

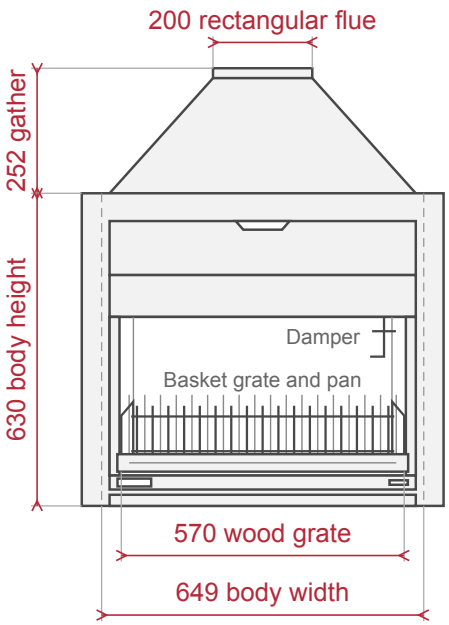

02 SIDE VIEW

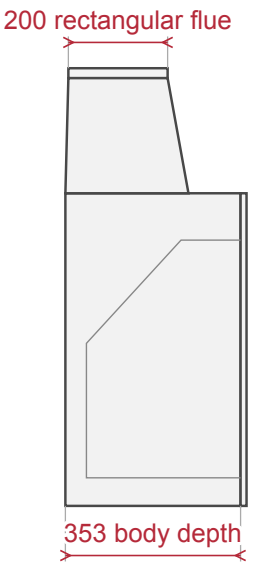

Front at the right.

03 TOP VIEW

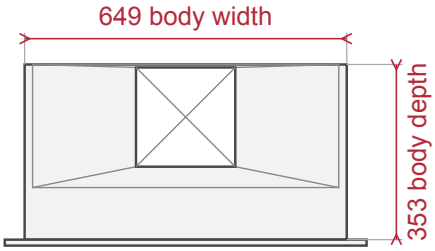

Front at the bottom. White: the flue outlet.

04 FLUE ACCESSORIES

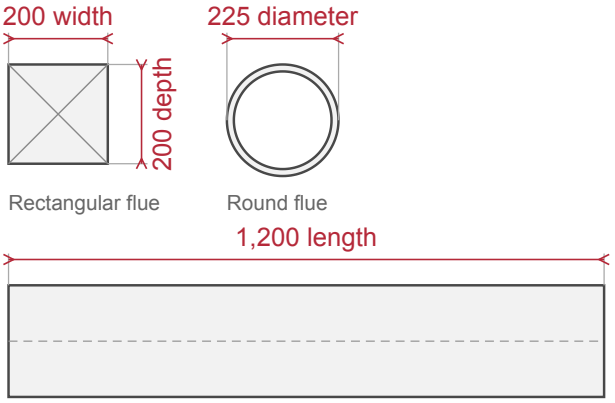

One length of round flue

BRAAI CULTURE

ALL SIZES IN MILLIMETRES

Jetmaster Pro Universal 600 with Basket Grate and Pan

05 WOOD GRATE (INCLUDED)

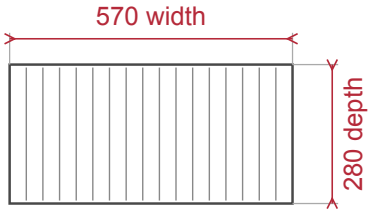

06 GAS GRATE (OPTION)

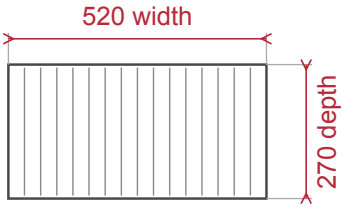

07 CLEARANCES FROM THE FRONT (SMALLER SCALE)

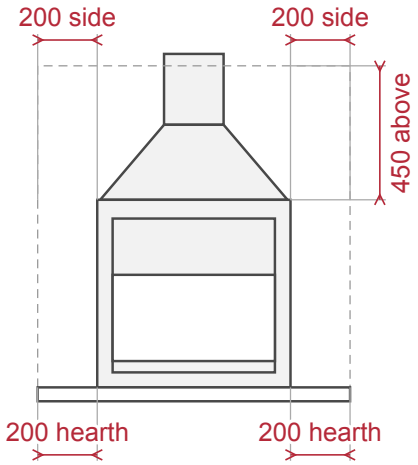

Keep combustible material outside the dashed line, unless it is properly insulated.

08 HEARTH FROM ABOVE (SMALLER SCALE)

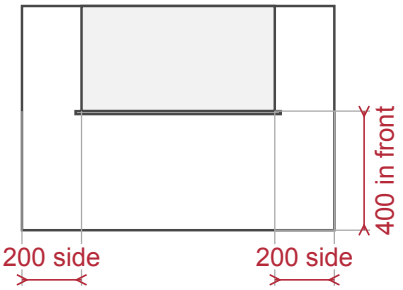

Front at the bottom. White: the non-combustible hearth.

PLANNING NOTES

Comes with a basket grate and pan.
For the width including the frame, add 100 mm.
These are product sizes, not a building-opening size. Ask us for the opening size before you build.
Ask us for the frame height and projection and the flue position: we confirm them with Jetmaster.
Build the chimney at least 3,600 high from the hearth. Ask us how far it must clear your roof apex.
The frame can sit at most 150 behind the face of the brickwork or plaster.
In an existing masonry recess, allow 25 mm all round for insulation.
An existing chimney needs a flue area of at least 300 cm².
Insulate all built-in surfaces of the firebox and gather with fibreglass. Keep the lower front air inlet open.
Ask us which flue parts come with it: the gather, adaptor, flue lengths and cowl.
The gas grate belongs to the gas version. It is not part of this wood fireplace.