ALL SIZES IN MILLIMETRES

Jetmaster Hex 800 with Basket Grate and Pan

Freestanding wood or charcoal fireplace: hexagonal, on a pedestal, with a basket grate and a hex flue

01 FRONT VIEW

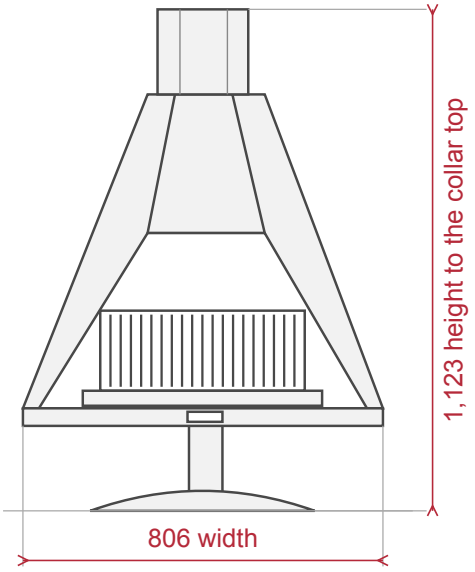

Inside: the 500 basket grate and pan.

02 SIDE VIEW

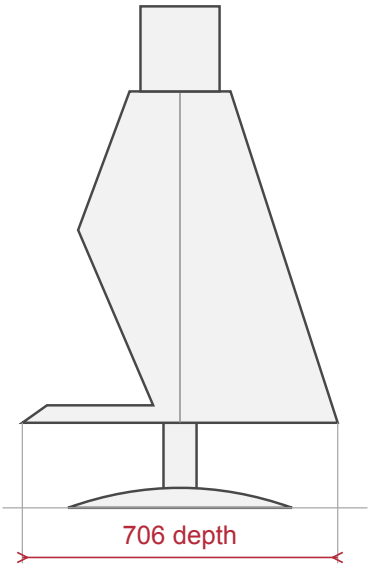

Front at the left.

03 TOP VIEW

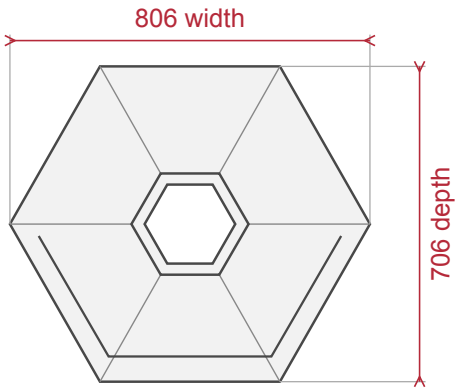

Front at the bottom.

04 HEX FLUE, CROSS-SECTION (LARGER SCALE)

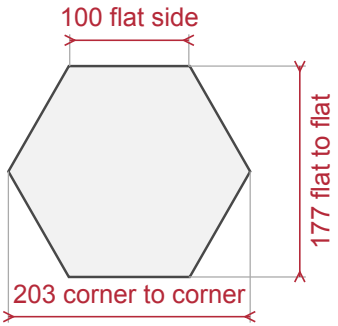

BRAAI CULTURE

ALL SIZES IN MILLIMETRES

Jetmaster Hex 800 with Basket Grate and Pan

05 SUPPLIED FLUE (SMALLER SCALE)



The 4.2 m is a supplied length, not an installed height.
The hex flue comes with a rotating cowl and an escutcheon plate.
An extra Hex 800 flue pipe with collar is an add-on on this page.

PLANNING NOTES

These are product sizes. Have an independent installer check the actual unit and the safe clearances around it.
The 1,123 runs from the base to the top of the short flue collar, before the flue.
Included: the body, the 500 basket grate and pan, the 4.2 m hex flue, the escutcheon plate, the rotating cowl, a poker and the installation manual.
The Hex 800 firescreen is an add-on on this page. Building work and installation are not included.