Jetmaster Rondo 490

Freestanding wood fireplace: closed combustion, with an open log store below the fire

01 FRONT VIEW

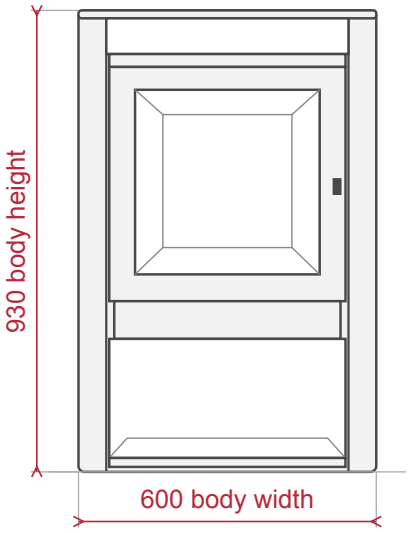

02 SIDE VIEW

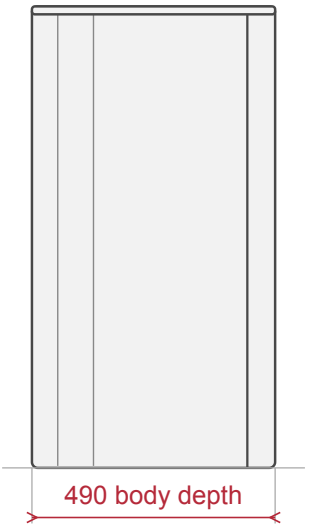

Round back at the left. Front at the right.

03 TOP VIEW

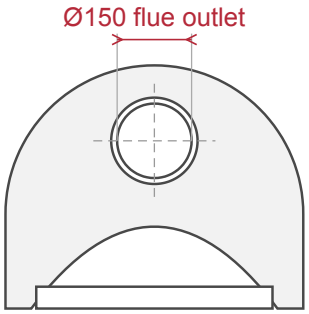

Back at the top. Front at the bottom.

04 FLUE SECTION (SMALLER SCALE)



This is a pipe length,
not the chimney height.

PLANNING NOTES

These are the stove's own sizes, not a hearth or room size. The 930 body height does not include the flue.
Your installer confirms the hearth, the floor protection and the clearances to walls and furniture before you order.
Have an independent installer plan the flue route, the roof exit and the chimney height for your home.
The flue pipes, bend, storm cowl, escutcheon plates and ceramic blanket are options on this page.
The hearth plate and the installation are not included.